Gasoline-engine management

Emission Control

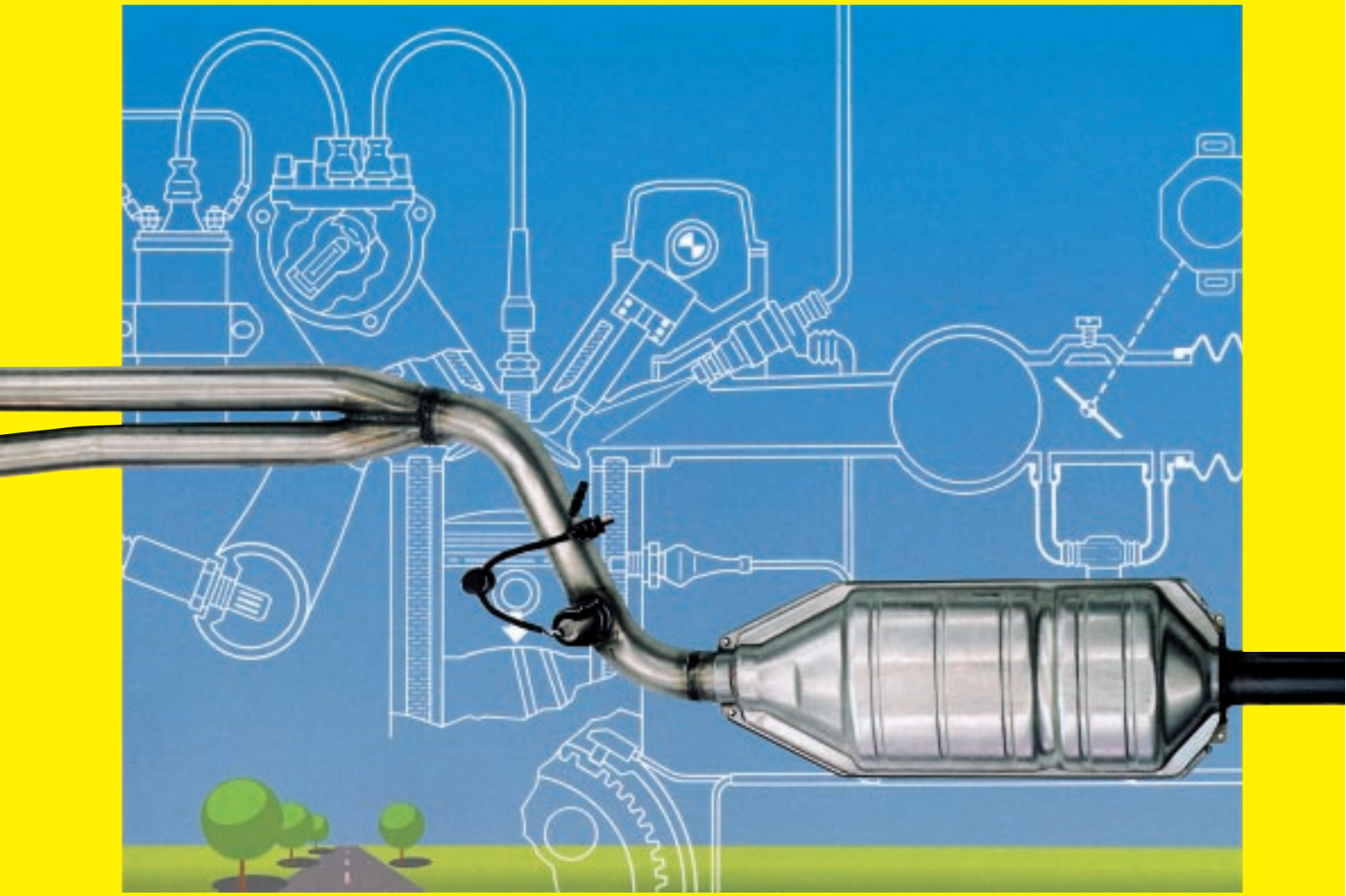

Technical Instruction

BOSCH

Published by:
© Robert Bosch GmbH, 1999
Postfach 30 02 20,
D-70442 Stuttgart.
Automotive Equipment Business Sector,
Department for Automotive Services,
Technical Publications (KH/PDI2).

Editor-in-Chief:
Dipl.-Ing. (FH) Horst Bauer.

Editors:
Dipl.-Ing. (BA) Jürgen Crepin,
Dipl.-Ing. Karl-Heinz Dietsche,
Dipl.-Holzw. Folkhart Dinkler.

Authors:
Dr. rer. nat. H. Schwarz,
Dipl.-Ing. (FH) D. Günther,
Dr.-Ing. G. König,
Dipl.-Ing. E. Schnaibel,
Dipl.-Ing. (FH) W. Dieter.

Presentation:
Dipl.-Ing. (FH) Ulrich Adler,
Berthold Gauder, Leinfelden-Echterdingen.

Translation:
Peter Girling.

Technical graphics:
Bauer & Partner, Stuttgart.

Unless otherwise stated, the above are all
employees of Robert Bosch GmbH, Stuttgart.

Printed in Germany.
Imprimé en Allemagne.

3rd Edition, September 1999.
English translation of the German edition dated:
March 1999.

Emissions Control

for gasoline engines

Today, environmental protection is becoming increasingly important. This fact also applies equally in the field of automotive engineering. Such terms as “greenhouse effect”, “toxic emissions”, “ozone”, and “acid rain” are everyday keywords from the environmental protection vocabulary. The protection of our environment is a matter of concern which is of equal importance not only for politicians, but also for engineers and vehicle operators. Even though the motor vehicle is responsible for only a relatively low proportion of total pollutant emissions, for years now a systematic reduction of the gasoline engine’s emissions has been taking place. These reductions went hand in hand with successive tightening of the emissions limits by the lawmakers in the various countries. All pollutant-reduction measures are aimed at achieving a minimum of emissions, while at the same time ensuring minimum fuel consumption, high mileages, and excellent driveability.
This manual describes how the engine’s concept and its operating conditions influence the pollutant emissions, how exhaust-gas treatment operates, and how exhaust-gas composition is measured.

Combustion in the gasoline engine

Spark-ignition or Otto-cycle engine 2
Engine design 4
Operating conditions 8
Fuels for gasoline engines 12

Emissions-control technology

Exhaust-gas constituents 14
Exhaust-gas treatment 16
Testing exhaust and evaporative emissions 27

Combustion in the gasoline engine

The spark-ignition or Otto-cycle engine

Operating concept

The spark-ignition or Otto-cycle[1]) powerplant is an internal-combustion (IC) engine that relies on an externally-generated ignition spark to transform the chemical energy contained in fuel into kinetic energy.
Today's standard spark-ignition engines employ manifold injection for mixture formation outside the combustion chamber. The mixture formation system produces an air/fuel mixture (based on gasoline or a gaseous fuel), which is then drawn into the engine by the suction generated as the pistons descend. The future will see increasing application of systems that inject the fuel directly into the combustion chamber as an alternate concept. As the piston rises, it compresses the mixture in preparation for the timed ignition process, in which externally-generated energy initiates combustion via the spark plug. The heat released in the combustion process pressurizes the cylinder, propelling the piston back down, exerting force against the crankshaft and performing work. After each combustion stroke the spent gases are expelled from the cylinder in preparation for ingestion of a fresh charge of air/fuel mixture. The primary design concept used to govern this gas transfer in powerplants for automotive applications is the four-stroke principle, with two crankshaft revolutions being required for each complete cycle.

Fig. 1

Reciprocating piston-engine design concept

OT = TDC (Top Dead Center); UT = BDC (Bottom Dead Center), V_h Swept volume, V_C Compressed volume, s Piston stroke.

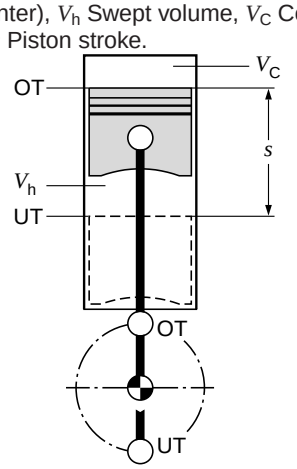

The four-stroke principle

The four-stroke engine employs flow-control valves to govern gas transfer (charge control). These valves open and close the intake and exhaust tracts leading to and from the cylinder:

1st stroke: Induction,
2nd stroke: Compression and ignition,
3rd stroke: Combustion and work,
4th stroke: Exhaust.

Induction stroke
Intake valve: open,
Exhaust valve: closed,
Piston travel: downward,
Combustion: none.

The piston's downward motion increases the cylinder's effective volume to draw fresh air/fuel mixture through the passage exposed by the open intake valve.

Compression stroke
Intake valve: closed,
Exhaust valve: closed,
Piston travel: upward,
Combustion: initial ignition phase.

[1]) After Nikolaus August Otto (1832–1891), who unveiled the first four-stroke gas-compression engine at the Paris World Exhibition in 1876.

As the piston travels upward it reduces the cylinder's effective volume to compress the air/fuel mixture. Just before the piston reaches top dead center (TDC) the spark plug ignites the concentrated air/fuel mixture to initiate combustion.
Stroke volume V_h
and compression volume V_C
provide the basis for calculating the compression ratio
$\varepsilon = (V_h+V_C)/V_C$.
Compression ratios ε range from 7...13, depending upon specific engine design. Raising an IC engine's compression ratio increases its thermal efficiency, allowing more efficient use of the fuel. As an example, increasing the compression ratio from 6:1 to 8:1 enhances thermal efficiency by a factor of 12 %. The latitude for increasing compression ratio is restricted by knock. This term refers to uncontrolled mixture inflammation characterized by radical pressure peaks. Combustion knock leads to engine damage. Suitable fuels and favorable combustion-chamber configurations can be applied to shift the knock threshold into higher compression ranges.

Power stroke
Intake valve: closed,
Exhaust valve: closed,
Piston travel: upward,
Combustion: combustion/post-combustion phase.

The ignition spark at the spark plug ignites the compressed air/fuel mixture, thus initiating combustion and the attendant temperature rise.
This raises pressure levels within the cylinder to propel the piston downward. The piston, in turn, exerts force against the crankshaft to perform work; this process is the source of the engine's power.
Power rises as a function of engine speed and torque ($P = M \cdot \omega$).
A transmission incorporating various conversion ratios is required to adapt the combustion engine's power and torque curves to the demands of automotive operation under real-world conditions.

Exhaust stroke
Intake valve: closed,
Exhaust valve: open,
Piston travel: upward,
Combustion: none.

As the piston travels upward it forces the spent gases (exhaust) out through the passage exposed by the open exhaust valve. The entire cycle then recommences with a new intake stroke. The intake and exhaust valves are open simultaneously during part of the cycle. This overlap exploits gas-flow and resonance patterns to promote cylinder charging and scavenging.

Fig. 2

Operating cycle of the 4-stroke spark-ignition engine

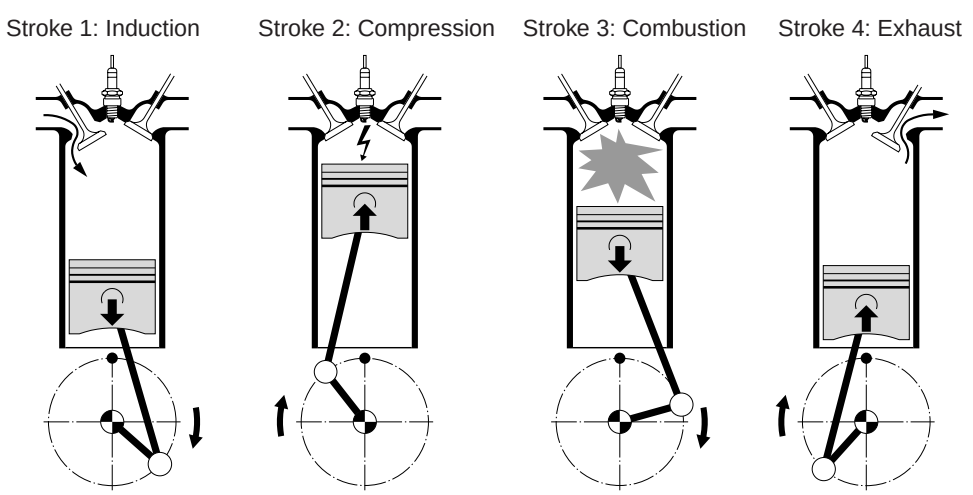

Engine design

While numerous individual design factors affect the levels of noxious emissions generated by an engine, powerplant layout must also reflect a range of other requirements. These include fuel economy, power, torque and preignition tendency along with the desire for smooth and tractable operation. As this implies, every engine design must necessarily be a compromise accomodating a variety of mutually antagonistic objectives.

Compression ratio

Although compression ratio assumes vital significance as a determinant of every engine's thermal efficiency, two factors work to prohibit blanket introduction of ultra-high compression ratios on all vehicles: higher emissions and the greater tendency toward combustion knock.

High compression ratios raise combustion-chamber temperatures. This promotes pre-ignition chemical reactions in the fuel, and can ultimately lead to portions of the air-fuel mixture self-igniting before being reached by the normal flame front. Basically, engines need fuel with higher octane ratings to counter this greater knock tendency, although suitable combustion-chamber configurations can also reduce an engine's preignition tendency to a certain degree.

Yet another factor is the rise in NO_X emissions that results from higher compression ratios and the higher combustion temperatures they produce. This extra heat within the combustion chamber shifts the overall chemical equilibrium of the combustion process toward higher concentrations of NO_X, but even more important is that it accelerates the reactive processes that foster NO_X generation. This consideration has combined with the low octane levels in available unleaded fuels to oblige manufacturers to specify lower compression ratios for countries with extremely stringent emissions laws, such as the USA and Japan, while retaining higher ratios for Europe. One result has been higher fuel-consumption figures for the low-compression versions.

Research on vehicles equipped with catalytic converters designed to comply with upcoming European emissions limits is focusing on avoiding the penalties in fuel economy that tend to accompany lower compression ratios. Efforts are concentrating on new design concepts for intake manifolds and combustion chambers along with complex engine-management systems.

Combustion-chamber layout

The shape of the combustion chamber has a considerable influence on generation of unburned hydrocarbons. Because the breeding grounds for hydrocarbon emissions are the pockets and mixture layers found immediately adjacent to the chamber's walls, combustion chambers with multiplanar geometries and large surface areas will tend to produce large quantities of unburned hydrocarbons. Improvements are available from compact combustion chambers featuring limited surface areas and designed to reduce octane requirements by promoting intense charge turbulence. This strategy is suitable for combination with high compression ratios, where it facilitates implementation of lean-burn concepts. The ultimate result is high efficiency and low emissions, as defined charge turbulence immediately around the spark plug tip is important for ensuring reliable ignition of the air/fuel mixture. Low turbulence is characterized by substantial fluctuations from cycle to cycle in the conditions (mixture status, residual gas levels) predominating at the spark plug, so random local variations assume substantial significance when the ignition fires. This leads to variations in the duration of flame-front propagation and from cycle to cycle produces inconsistencies in combustion processes. Induced turbulence within the combustion chamber substantially reduces these fluctuations.

Another decisive factor for both emissions and fuel consumption is the location of the spark plug. Central locations with short flame travel provide fast and relatively complete combustion which result in lower emissions of unburned hydrocarbons (Figure 1). Flame travel can be further reduced by using two spark plugs (twin-spark concept) in each combustion chamber, with benefits for both emissions and fuel economy. Thanks to short flame travel paths, yet another advantage of a compact combustion chamber with either a central spark plug or dual plugs is a lower octane requirement. This asset, in turn, can be exploited with higher compression ratios for improved thermal efficiency.

Four-valve engines featuring two intake and two exhaust valves for each cylinder provide particularly positive effects (Figure 2). Not only does four-valve technology allow compact combustion chambers, with the accompanying short flame paths, it also provides more efficient gas flow.

Valve timing

The gas-exchange process in which combusted gases are replaced by fresh mixture within the cylinder is controlled by the intake and exhaust valves. These valves open and close at specified intervals defined as valve timing. Valve timing combines with the valve lift (travel) as regulated by the ramps on the camshaft lobes to define gas flow. The amount of fresh gas entering the cylinder determines the engine's torque and power.

The residual gases are that portion of the combusted mixture that remains within the cylinder instead of being discharged through the open exhaust port. These gases also affect flame propagation and combustion, with collateral effects on emissions of unburned hydrocarbons and nitrous oxides as well as overall thermal efficiency. In the valve-overlap phase the intake and exhaust valves are open simultaneously. During this period fresh

Fig. 1

Effect of spark-plug position on fuel consumption and HC emissions

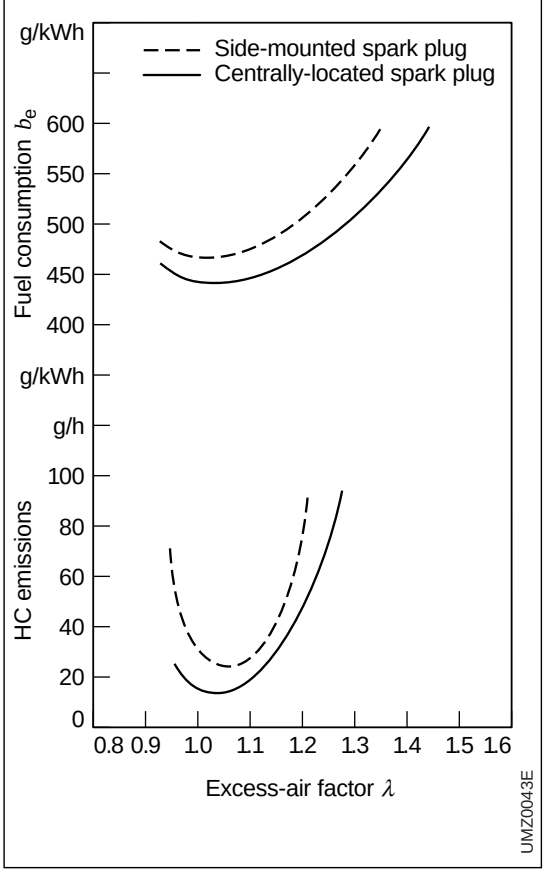

Fig. 2

Reductions in fuel consumption and HC emissions with 4-valves per cylinder

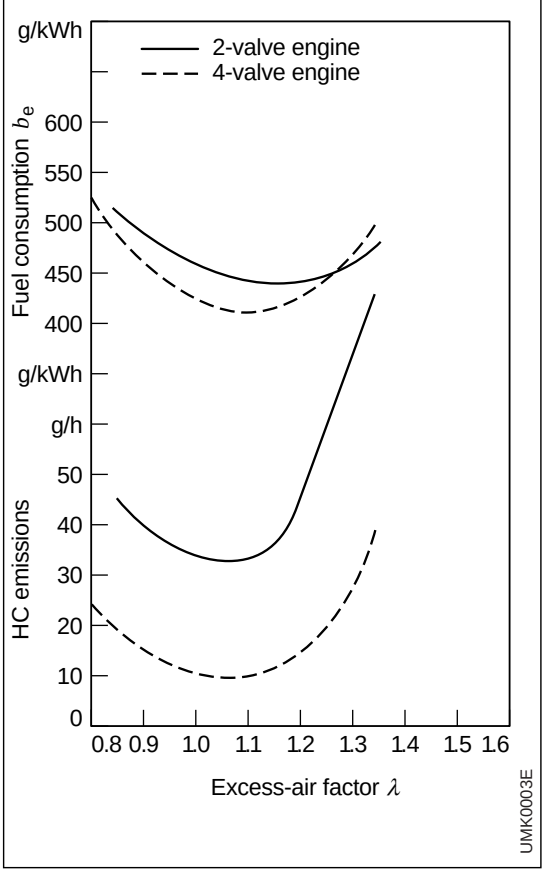

mixture may be discharged through the exhaust valve and/or exhaust gases may flow back into the intake manifold, depending on pressure patterns (Figure 3). This process has a major effect on engine efficiency and levels of unburned hydrocarbons.

Any individual set of valve-timing specifications can only be optimal at a single engine speed. To elucidate the principle: Extending the intake-valve opening period increases the output power at high speeds, but also means increased valve overlap. This overlap leads to increased emissions of unburned hydrocarbons as well as rough running (owing to the larger proportion of residual gases) at the low end of the engine's speed range and at idle. Thus the optimal solution is a variable valve-timing concept capable of adapting to changes in rpm and load factor.

One method is to shift the rotation angle of the intake camshaft on dual-cam engines for increased valve overlap. This strategy provides high top-end performance and handling, while valve overlap at the lower end of the rev range is reduced for low emissions of unburned hydrocarbons.

Intake-manifold geometries

Valve timing is not the only factor that shapes the gas-exchange process: Intake and exhaust-tract configuration are also vital. Periodic pressure waves are generated within the intake manifold during the cylinder's intake stroke. These pressure waves propagate through the intake runners and are reflected at their ends. The idea is to adapt the length and diameter of the runners to the valve timing in such a way that a pressure peak reaches the intake valve just before it closes. This supplementary pressurization effect increases the mass of fresh gas entering the cylinder (Figure 4). Similar principles apply to the exhaust tract. If the exhaust manifold and downstream system are configured to produce a positive pressure differential during valve overlap, the result will be efficient gas flow with benefits in the areas of emissions, power and fuel consumption.

Injection systems that discharge fuel directly in front of the intake valves provide for intake-manifold designs that promote highly efficient gas exchange Because such manifolds only need to distribute air (and not mixture, as for instance when used with a carburetor) their geometry can be optimized for improved fuel economy and reduced emissions.

Intake manifolds that promote swirl have a similar effect to combustion-chamber turbulence and generate a gas-flow

Fig. 3

Valve timing diagram

s Valve lift, *a* Valve clearance,
b Valve overlap.
AÖ Exhaust valve opens
AS Exhaust valve closes
EÖ Intake valve opens
ES Intake valve closes

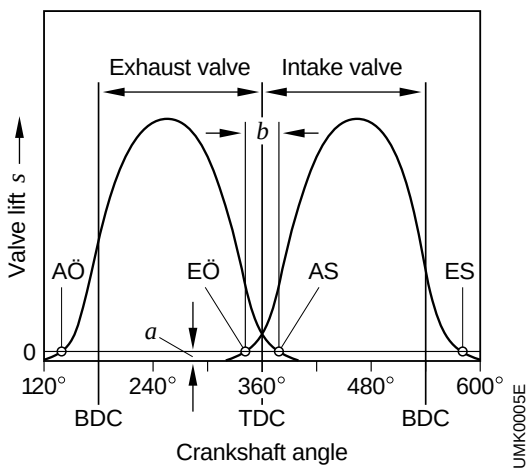

Fig. 4

Induction boost from manifold geometry (intake-wave ram effect)

V_h Swept volume, V_R Intake-runner volume ($V_R \geq V_h$), *l* Intake-runner length.

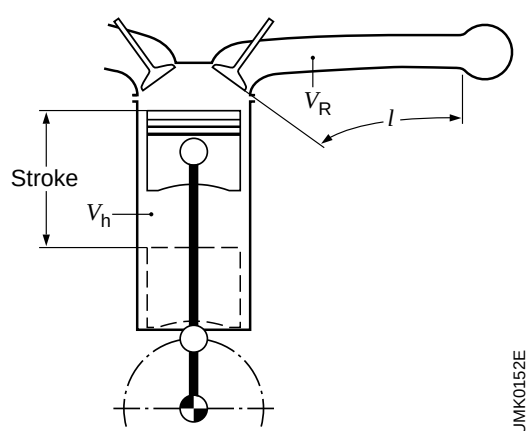

pattern that promotes accelerated conversion of the air-fuel mixture inside the combustion chamber. This improves thermal efficiency while also allowing leaner mixtures. This makes induced intake swirl another option for use in low-emission engine concepts.

Stratified charge

Although spark-ignition engines are generally designed to operate on a homogenous air-fuel mixture, deliberately induced charge stratification can be employed to obtain pronounced changes in the nature of the combustion process.
The object of designing a stratified-charge powerplant is to ensure reliable ignition by placing rich mixture in the immediate vicinity of the spark plug, but then allowing most of the subsequent conversion process to proceed in the lean-mixture region. A very efficient (although relatively complicated) method is to divide the combustion chamber into different sectors, and then use an auxiliary mixture-formation system to supply rich mixture to a spark plug located within a small prechamber. An advantage of this concept is that it ensures reliable ignition despite the lean mixture conditions predominating in the combustion chamber as a whole. As all combustion proceeds either in very rich or extremely lean mixtures, this strategy can be used to achieve substantial reductions in NO_X emissions. At the same time, the stratified-charge engine's greater combustion-chamber surface area leads to far higher emissions of unburned hydrocarbons than in the case of powerplants with an open chamber layout. Another stratification concept is to inject gasoline directly into the combustion chamber. In a process analogous to that used in diesel engines, this creates a rich area next to the spark plug, even though the overall mixture in the cylinder is lean. This kind of direct injection also has distinct disadvantages, such as low specific output, design complexity, etc.
It is also possible to achieve a certain degree of charge stratification by endowing the gas flowing into the combustion chamber with a carefully calculated swirl pattern. The "layer effect" is not very pronounced, and the process is also difficult to control; it fluctuates considerably in response to changes in the engine's instantaneous operating conditions.

Other engine-based strategies

Action directed toward sinking power requirements and thus fuel consumption on the periphery of the engine can also influence exhaust emissions. The possibilities include reducing friction at the pistons and in the drivetrain as well as specifying fans, alternators and other ancillaries with lower power requirements. In this case reductions in fuel consumption are directly reflected in proportional drops in toxic emissions. This is the opposite of the response pattern encountered with most of the concepts based on direct manipulation of the engine's thermodynamic balance.
Under real-world operating conditions, a large proportion of carbon monoxide and unburned-hydrocarbon emissions are generated in the engine's warm-up phase, before it has reached its normal operating temperature. The duration of this phase can be substantially reduced through suitable design of the cooling and lubrication systems. This not only improves fuel economy, but also brings rewards in the form of disproportionately high reductions in emissions of carbon monoxide and unburned hydrocarbons.

Operating conditions

Engine operating range

Engine speed
Higher engine speeds mean increased internal friction losses as well as greater power consumption from ancillary devices. This translates into reduced effective power generation for any given rate of energy supply; efficiency drops. When any specific amount of power is generated at a higher rpm, fuel consumption will be greater than when the same power is produced at a lower engine speed. Naturally, this will also raise emissions.
The effects of this engine-speed factor are reflected by all exhaust components to more or less the same degree.

Engine load factor
Changes in engine load factor affect the individual components in different ways. Higher loads are accompanied by increases in combustion-chamber temperature, reducing the depth of the quench zone adjacent to the chamber's surfaces. The higher exhaust-gas temperatures that accompany high-load operation also promote useful secondary reactions during the expansion and exhaust phases. Higher loads thus reduce emissions of unburned hydrocarbons relative to power output.
CO emissions present a similar picture, with the higher process temperatures promoting secondary reactions to produce CO_2 during the expansion (combustion) phase.
NO_X emissions display a completely opposite response pattern. The higher combustion-chamber temperatures characteristic of high load factors promote the formation of NO_X to produce a disproportionate rise in NO_X emissions as loads increase.

Vehicle speed
The extra power required to maintain higher road speeds also increases fuel consumption.
The processes described in the preceding section compensate for the effects that higher fuel consumption might otherwise be expected to have on emissions of hydrocarbons and carbon monoxide; emissions of these exhaust components thus remain relatively insensitive to vehicle speed. At the same time, the curve for NO_X emissions directly mirrors vehicle speed.

Dynamic operation
In dynamic operation a spark-ignition engine develops substantially higher emissions than during static operation. This is due to the imperfect adaptation of mixture formation during the transitional phases associated with dynamic operation. When the throttle valve opens abruptly, a portion of the fuel supplied by a throttle-body injection unit or carburetor condenses and remains inside the intake manifold. These systems rely on acceleration-enrichment strategies to compensate. With carburetors, in particular, it is not possible to control this enrichment with sufficient accuracy to ensure that all cylinders receive an optimal air-fuel mixture during transitional phases, and higher emissions of unburned hydrocarbons and carbon monoxide are the result.
On the other hand, multipoint injection systems designed to discharge fuel directly in front of the cylinders' intake valves have a distinct advantage in this area, to the extent that acceleration enrichment is usually completely unnecessary once the engine is warm. This better injection-system performance is available under all dynamic operating conditions because there is no need to alternately recharge and evacuate an extra fuel storage device – which is what the intake manifold acts as in systems with single-point injection. This pattern also affects fuel consumption: the superiority of fuel injection over carburetors in the realm of fuel economy is proportional to the how dynamically the vehicle is operated.

Air-fuel mixture

Air/fuel ratio

Because the A/F ratio is a crucial factor in defining an engine's emissions (Figure 2), the engine-management system is of immense importance in determining exhaust content.

CO emissions

In the rich range (air deficiency), CO emissions and air-fuel mixture feature virtually parallel progression curves. Within the lean range (with excess air) CO emissions stay at very low levels while remaining largely insensitive to changes in A/F ratio. In the sector around the stoichiometric $\lambda = 1$ mixture, the primary factor determining levels of CO emissions is how uniformly the fuel is distributed to the individual cylinders. A combination of some rich cylinders and some lean ones operating together will produce higher mean overall emissions than would emerge with all cylinders running at a uniform excess-air factor λ.

HC emissions

Although HC emissions mimic CO emissions by falling in response to higher excess-air factors during operation in the rich range, the hydrocarbons start to rise again in the lean range. Minimum HC emissions occur at roughly $\lambda = 1.1\ldots1.2$. This increase in HC emissions within the lean range is caused by the deeper quench zone that arises from lower combustion-chamber temperatures. With extremely lean mixtures this effect is amplified by slower combustion, which can culminate in ignition miss with an attendant drastic rise in HC emissions. Excess-air factors in this range mark the powerplant's lean-burn limit.

NO_X emissions

The relationship between NO_X and the excess-air factor λ is the reverse of the pattern described above: in the rich range, emissions respond to higher excess-air factors and their higher oxygen concentrations by climbing. In the lean range, NO_X emissions react to increases in excess-air factor by falling, as the progressive reduction in mixture densities results in lower combustion-chamber temperatures. Maximum NO_X emissions are encountered with moderate excess air in the $\lambda = 1.05\ldots1.1$ range.

Fig. 1
Only a thoroughly atomized injection spray can provide the homogenous mixture needed for efficient combustion and low emissions of unburned hydrocarbons

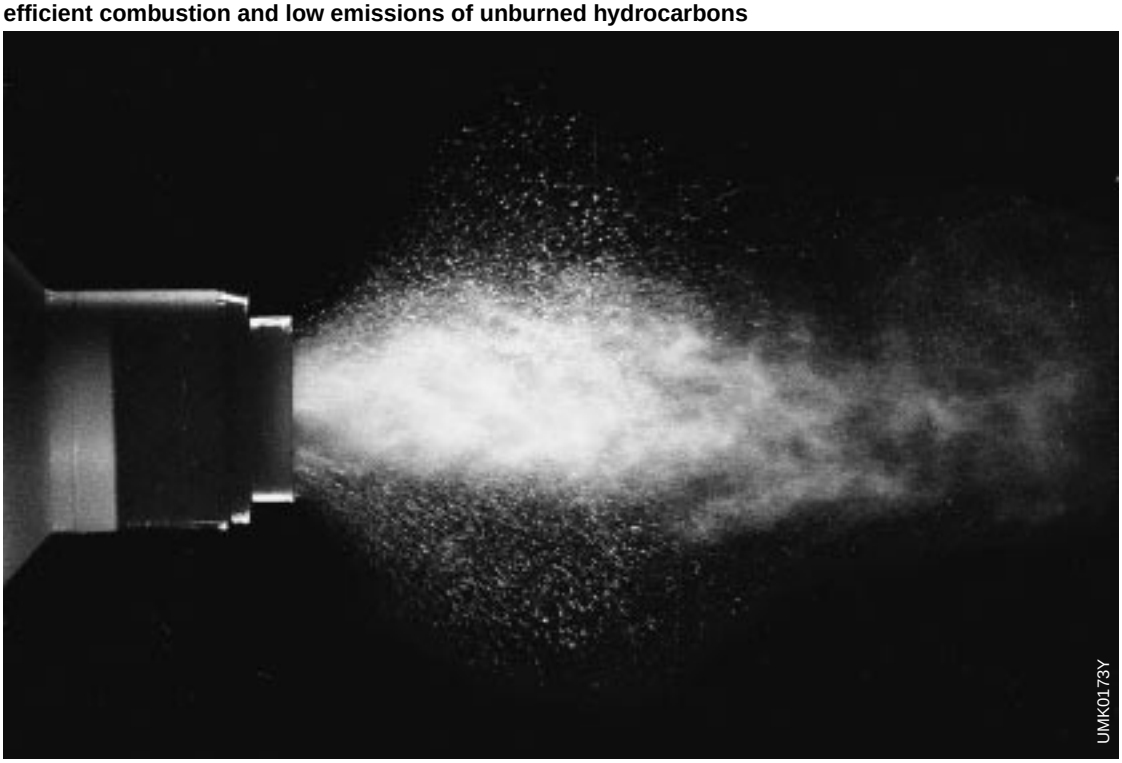

Air-fuel mixture formation

Optimal combustion sequences within the spark-ignition engine are obtained from homogenous mixtures, formed when efficient atomization produces fuel droplets that are as minute as possible (Figure 1).
Because inefficient mixture formation induces inconsistent flame-front propagation, it also leads to substantially higher emissions of unburned hydrocarbons (HC components).
Mixture formation and mixture distribution are closely related processes. Poor mixture generation of the kind encountered when carburetors operate at the top end of the load range lead to large fuel droplets being deposited in the bends inside the intake manifold. At this point the amount of fuel delivered to each individual cylinder is largely determined by purely random factors. In addition, uneven distribution has a negative influence on toxic emissions. HC and CO emissions both rise, as does fuel consumption, while power generation drops.
Injection systems designed to spray fuel into the area immediately in front of the intake valves provide extremely uniform fuel distribution. The intake manifold transports only an extremely even flow of air, while the injection system meters uniform quantities of fuel directly into all cylinders.

Fig. 2

Effect of excess-air factor λ and ignition timing α_z on exhaust emissions and fuel consumption

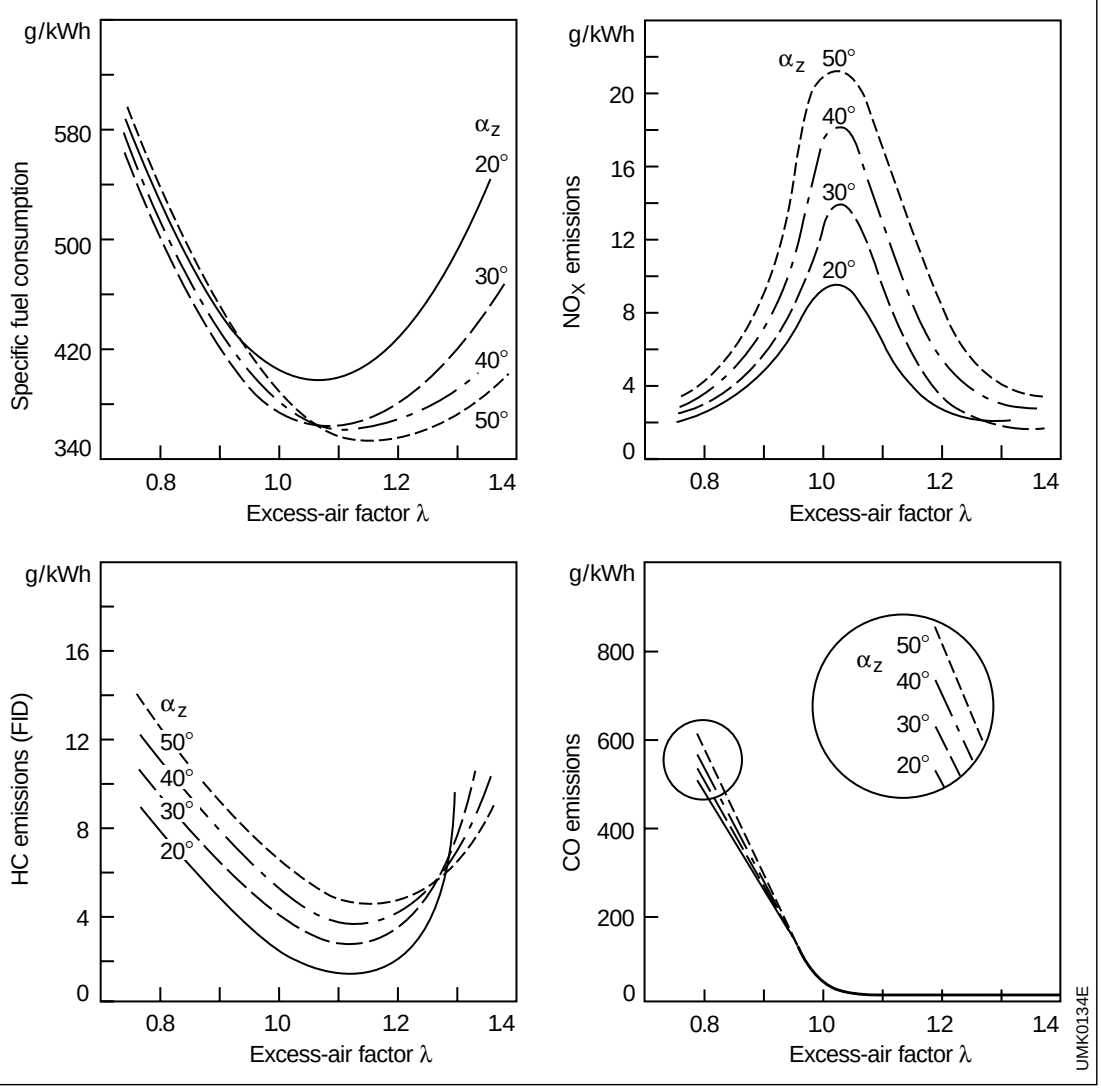

Ignition

Ignition of the air-fuel mixture – defined here as the time that elapses between arc formation and the development of a stable flame front – has a decisive influence on the combustion process. The quality of ignition is determined by the timing of the arcing process and the available ignition energy.
High excess energy provides consistent ignition with positive effects on the stability of the combustion process from cycle to cycle. Low levels of cyclic variation lead to smoother engine operation as well as reductions in emissions of unburned hydrocarbons. These facts result in the following priorities for spark plugs:

- Wide electrode gap to maximize activated gas volume,
- Exposed and unobscured arcing path to ensure optimal access to the air-fuel mixture,
- Thin electrodes and projecting spark position to minimize heat dissipation through electrodes and cylinder wall.

Under critical ignition conditions such as idle, both smoother operation and considerable reductions in HC emissions can be obtained by increasing the spark-plug electrode gap. Higher ignition energy furnishes similar benefits. Ignition systems with extended arcing durations, providing correspondingly higher levels of energy transfer to the mixture, are superior for igniting lean mixtures.
A/F ratio is joined by ignition timing among the factors with the greatest effect on emissions (Figure 2).

HC emissions
Advancing the ignition timing raises levels of unburned hydrocarbons, as the lower exhaust-gas temperatures inhibit progress of secondary reactions in the combustion and exhaust phases. This trend does eventually reverse itself, but only at extremely lean mixture ratios. Combustion in lean mixtures takes place so slowly that it is still in progress when the exhaust valve opens. As a result, if timing advance is limited to only minimal levels, the engine will reach its lean-burn limit sooner when it runs on low λ excess-air factors.

NO_X emissions
Throughout the entire A/F ratio range, NO_X emissions increase along with increasing ignition advance. This is due to the high combustion-chamber temperatures that result from advanced ignition timing; this extra heat not only shifts the combustion process' chemical equilibrium toward greater NO_X formation, but – even more significant – also greatly accelerates the rate at which this NO_X generation takes place.

CO emissions
CO emissions are essentially insensitive to changes in ignition timing, as they are almost entirely a function of the A/F ratio.

Fuel consumption
The effects of timing advance on fuel consumption are the exact opposite of its influence on emissions. If the combustion sequence is to remain optimal at higher excess-air factors λ, then ignition timing must be advanced to compensate for the slower combustion rate. Thus advanced ignition timing means lower fuel consumption and more torque.
Complex ignition-timing control mechanisms, capable of independent optimization of firing points in all engine operating ranges, are vital for homing in on the best compromise between the conflicting demands of fuel economy and exhaust emissions.

Fuels for gasoline engines

Minimum requirements for these fuels are contained in various national standards. European Standard EN 228 defines the unleaded fuel on the market in Europe (Euro-Super).
DIN 51 607 defines the German specifications for unleaded fuels; DIN 51 600 the specifications for premium leaded gasoline.

Components

Fuels for spark-ignition engines are basically hydrocarbon compounds, but can also contain oxygenous organic compounds or other additives for improved performance. The basic classes are regular and premium fuel, with the latter having enhanced knock resistance for use in high-compression engines.

Unleaded gasoline (DIN 51 607)
Unleaded gasoline is indispensable for vehicles that rely on catalytic converters for exhaust-gas treatment, as lead would damage the layers of noble metals in the converter and render it inoperative.
Unleaded fuels are a mixture composed of special high-grade, high-octane components, in which resistance to preignition can be further enhanced through the addition of nonmetallic additives. Maximum lead content is limited to 13 mg/l.

Leaded gasoline (DIN 51 600)
Environmental considerations dictate that leaded fuels be used exclusively in those engines with exhaust valves that require the combustion products of lead-alkyl compounds for lubrication. This basically applies only to a small number of older vehicles, and sales of leaded gasoline are decreasing steadily. Currently available “Super Plus” provides the same anti-knock protection as leaded gasoline. In most European countries maximum lead content is restricted to 0.15 g/l.

Specifications

Density (DIN 51 757)
European Standard EN 228 limits the fuel density range to 725…780 kg/m^3. Because premium fuels generally include a higher proportion of aromatic compounds, they are denser than regular gasoline and also have a slightly higher calorific value.

Knock protection (octane rating)
The octane rating defines resistance to preignition in fuels for spark-ignition engines. Higher octane ratings indicate a greater resistance to knock. Two different procedures are in international use for defining octane ratings; these are the Research Method and the Motor Method (DIN 51 756; ASTM D 2699 and ASTM D 2700).

RON, MON
The number determined in testing using the Research Method is the Research Octane Number, or RON. It can be considered as the essential index of acceleration knock.
The Motor Octane Number, or MON, is derived from testing according to the Motor Method. The MON basically provides an indication of the tendency to knock at high speeds. MON figures are lower than those for RON.
Octane numbers up to 100 specify the percentage by volume of iso-octane contained in a mixture with n-heptane at the point where the mixture’s knock resistance in a test engine is identical to that of the fuel being tested.
Iso-octane, with its extreme resistance to knock, is assigned the RON/MON octane number 100, and n-heptane, with its low resistance to knock, the number 0.

Enhancing knock resistance
Normal (untreated) straight-run gasoline has only modest resistance to knock. Various refinery components must be added to obtain a fuel with an adequate octane rating. The highest-possible octane level must be maintained throughout the fuel’s entire boiling range.

Knock inhibitors

The most effective knock inhibitors are organic lead compounds. These can raise the octane number by several points, with the exact amount depending on the specific hydrocarbon structure. Both DIN 51 600 and most European national standards limit lead content to a maximum of 150 mg per litre of fuel. Environmental considerations have combined with increasingly widespread use of catalytic converters to produce a steady reduction in the use of lead alkyls.

Volatility

Gasoline must satisfy stringent volatility requirements to ensure satisfactory engine operation. The fuel must contain a large enough proportion of highly-volatile components to ensure good cold starting, but volatility should not be so high that it causes hot-starting and handling problems (vapor lock) when the fuel is hot.

In addition, environmental considerations demand that evaporative losses be maintained at minimal levels. Volatility is defined in various ways.

Boiling curve

Three ranges on the boiling curve are significant for their effect on performance. These ranges can be defined based on fuel evaporation rates at three different temperatures.

Vapor pressure

DIN 51 600 and DIN 51 606 limit the fuel vapor pressure at 38 °C to 0.7 bar for summer gasoline and 0.9 for winter gasoline. The actual curves for vapor pressure over temperature are very sensitive to variations in the composition of the fuel.

Vapor/liquid ratio

This specification serves an an index of a fuel's tendency to form vapor bubbles. It is the volume of vapor generated by a specific quantity of fuel under a defined pressure at a set temperature.

Additives

Along with the structure of the hydrocarbons (refinery components), it is the additives that determine the ultimate quality of any given fuel. Additives are generally combined in packages containing individual components with various attributes. Extreme care and precision are vital both in testing additives and in determining their optimal concentrations. It is essential to avoid any undesirable side-effects. Both the definition of additive component levels and their physical mixing with the gasoline should be performed by the fuel manufacturer.

Anti-aging additives

These agents are added to fuels to improve their stability during storage, and are particularly important in fuels containing cracked components. They inhibit oxidation with atmospheric oxygen and prevent catalytic reactions with metal ions.

Protection against corrosion

The entrainment of water into the fuel system can lead to corrosion. This can be effectively counteracted by the use of anti-corrosive additives which form a protective layer beneath the film of water.

Intake-tract contamination inhibitors

Detergent additives ensure that the intake system (throttle valve, injectors, intake valves) remains free of contamination and deposits; this satisfies a prerequisite for trouble-free operation and minimal exhaust emissions.

Anti-icing additives

These additives are intended to prevent water vapor in the intake air from freezing on the throttle valve. Alcohols, for instance dissolve ice crystals, while other additives inhibit the formation of ice deposits on the throttle valve.

Emissions-control technology

Exhaust-gas constituents

The quality of the air we breathe is affected by a range of factors. Emissions from industry, private households and power plants all join traffic as significant sources of emissions (Figure 1).
The following basic principle holds true for all internal-combustion engines: Complete combustion within the engine's cylinders is a physical impossibility, even when more than enough oxygen is available. The levels of toxic emissions in the exhaust gas directly mirror the efficiency of the combustion process, with less-complete combustion leading to more emissions. The object is to modify the composition of the spark-ignition engine's exhaust-gases with expedients such as the catalytic converter (Figure 3).

The ultimate goal behind all strategies for reducing the entire spectrum of legally regulated pollutants is to achieve maximum fuel economy, good performance and tractability while simultaneously generating only minimal toxic emissions. In addition to a high proportion of harmless components, the spark-ignition engine's exhaust gases also contain combustion byproducts (Figure 2); which, in high concentrations, represent a potential hazard for the environment. These pollutants make up about 1% of the exhaust gas, with this 1% consisting almost entirely of carbon monoxide (CO), oxides of nitrogen (NO_X) and hydrocarbons (usually designated HC). The effect of the air-fuel mixture on relative concentrations of these substances is of particular interest: the response pattern for NO_X is exactly the opposite to that for CO and HC.

Fig. 1

Total emissions in Germany, 1996

In percent by weight.
Not including emissions from natural sources.
Total emissions: 935 Mt (metric megatons).

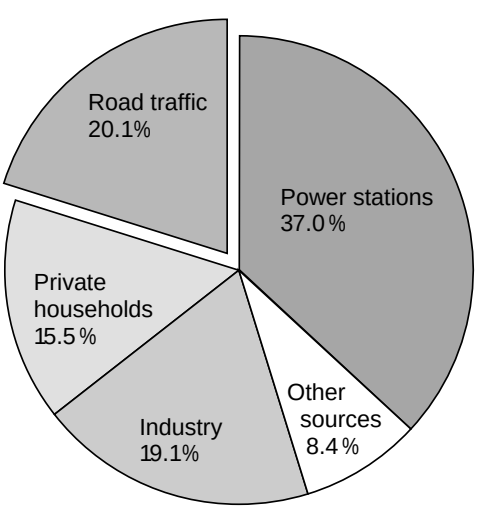

Reference source:
1997 Federal Report on Emissions Protection

UMA0026E

Fig. 2

Components of road-traffic emissions

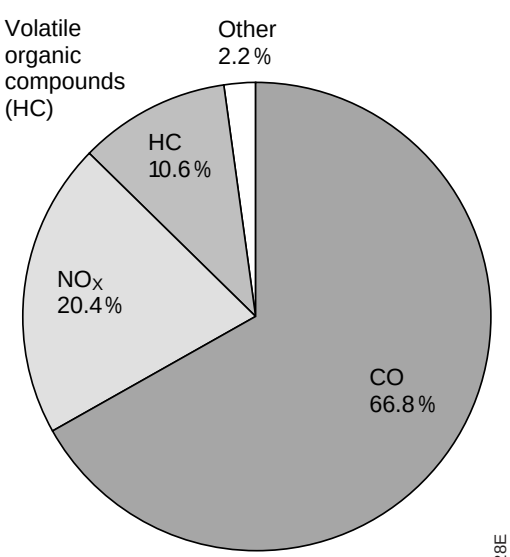

Reference source:
1997 German Federal Government Report on Emissions

UMA0028E

Catalytic converter for processing the pollutants CO, HC, NO_X

1 Ceramic material with catalytically active coating (monolith),
2 Flexible metal retaining screen,
3 Housing.

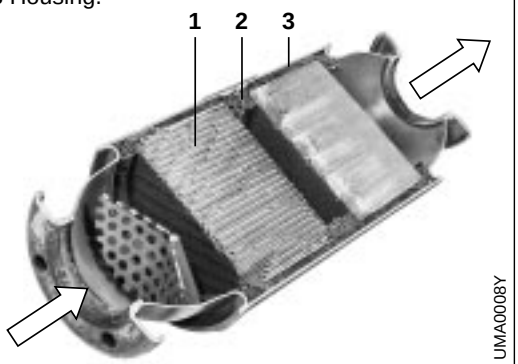

Fig. 3

Primary components

The primary components in exhaust gas are nitrogen (N_2), carbon dioxide (CO_2) and water vapor (H_2O). These are not toxic substances.
Nitrogen is the most abundant element in the atmosphere. Although not directly involved in the combustion process, at roughly 71 % it is the main component in exhaust gas. Small amounts of nitrogen do, though, react with oxygen to form nitrous oxides.
Complete combustion converts the hydrocarbons contained in the fuel's chemical bonds into carbon dioxide, which makes up about 14% of the exhaust gas. Reduction of CO_2 is becoming increasingly significant, as it is a suspected contributor to the "greenhouse effect." Because CO_2 is one of the products of complete combustion (which may proceed within the exhaust gas), the only way to reduce CO_2 emissions is via reductions in fuel consumption.
The hydrogen chemically bonded within the fuel burns to produce water vapor, most of which condenses as it cools. This is the vapor cloud that can be seen emerging from exhaust pipes in cool weather.

Combustion byproducts

The most important byproducts of the combustion process are carbon monoxide (CO), hydrocarbons (HC) and nitrous oxides (NO_X).

Carbon monoxide (CO) is a colorless and odorless gas produced by incomplete combustion. It can cause asphyxiation by impairing the blood's ability to absorb oxygen. This is why an engine should never be allowed to run in an enclosed area unless an exhaust-gas extraction system is in operation.

Hydrocarbons (HC) in exhaust gas stem from either hydrocarbon compounds newly formed during combustion, or from residual unburned hydrocarbons. Aliphatic hydrocarbons are odorless and have a low boiling point. Closed-chain aromatic hydrocarbons (benzol, toluol, polycyclic hydrocarbons) emit a distinct odor, and it is suspected that long-term exposure may also be carcinogenic. Partially-oxidated hydrocarbons (aldehydes, cetones, etc.) emit a disagreeable odor. They respond to sunlight by reacting to form substances which are considered to be carcinogenic in case of extended exposure to higher concentrations.

Nitrous oxides (NO_X) are the result of secondary reactions occurring in all combustion processes that use air. The main forms are the NO and NO_2 produced when oxygen combines with atmospheric nitrogen during high-temperature combustion. Colorless and odorless NO gradually converts to NO_2 in the atmosphere. Pure NO_2 is a reddish-brown gas with a pungent odor. At the levels that occur in exhaust gases and in highly polluted air, NO_2 can irritate the mucous membranes in the respiratory system.

Sulfur dioxide (SO_2) is produced when sulfur contained in the fuel is combusted. A relatively small proportion of this pollutant stems from motorized traffic. The catalytic converter cannot treat the SO_2 in the exhaust gas, and its effectiveness in treating other exhaust components also suffers when SO_2 is present. As a result, efforts are being directed toward reducing levels of sulfur in gasoline and diesel fuel.

Exhaust-gas treatment

Lambda closed-loop control

Of currently available methods, lambda closed-loop control systems incorporating a catalytic converter are the most effective when it comes to cleaning the exhaust gases from spark-ignition engines. None of the available alternatives are capable of reaching anywhere near the same low emissions levels.

Currently available ignition and fuel-injection systems can achieve extremely low levels of emissions, and catalytic converters allow further reductions in the critical hydrocarbon (HC), carbon monoxide (CO) and nitrous oxide (NO_X) components within the exhaust gas.
The 3-way or selective catalytic converter performs particularly well. It is able to reduce the emissions of hydrocarbons, carbon monoxide and nitrous oxides by more than 98 %, provided that the engine operates within a very narrow scatter range (<1%) centered around the stoichiometric A/F ratio (λ = 1.0). While consistent maintenance of this restricted tolerance range is necessary under all operating conditions, not even modern injection systems can comply without asssistance. The answer is to employ the lambda closed-loop control system which relies on a closed-loop control circuit to consistently maintain the air-fuel mixture entering the engine within the optimal range known as the “catalyst window” (Figure 1).

Implementing this concept entails monitoring exhaust-gas composition as the basis for making instantaneous corrections in the mixture’s fuel content. The monitoring device is the oxygen or lambda sensor. Because this probe displays a voltage jump when the mixture is precisely stoichiometric (λ = 1), the signal it generates indicates whether the mixture is richer or leaner than λ = 1.

Lambda oxygen sensor
The oxygen sensor is installed in the exhaust tract, where it monitors the flow of exhaust gases from all cylinders. Conceptually, it is a galvanic oxygen concentration cell with a solid-state electrolyte.

Design
The solid-state electrolyte is an impermeable zirconium dioxide ceramic unit stabilized with yttrium oxide, open on one side and closed on the other. Gas-permeable platinum electrodes are mounted on both the inner and outside surfaces.
The outside platinum electrode acts as a miniature catalyst to support reactions in the incoming exhaust gases and bring them into a state of stoichiometric balance. The side exposed to the exhaust gases also has a porous ceramic layer (Spinell coating) to protect it against contamination. A metal tube with numerous slots guards the ceramic body against im-

[1]) The stoichiometric air-fuel ratio is the mass ratio of 14.7 kg air to 1 kg gasoline theoretically necessary for complete combustion. The excess-air factor or air ratio λ (lambda) indicates the deviation of the actual air-fuel ratio from the theoretically required ratio:

$$\lambda = \frac{\text{actual inducted air mass}}{\text{theoretical air requirement}}$$

Fig. 1

Lambda oxygen sensor: Control range and reductions in harmful exhaust emissions

1 Without catalytic exhaust treatment,
2 With catalytic exhaust treatment,
3 Lambda oxygen sensor voltage curve.

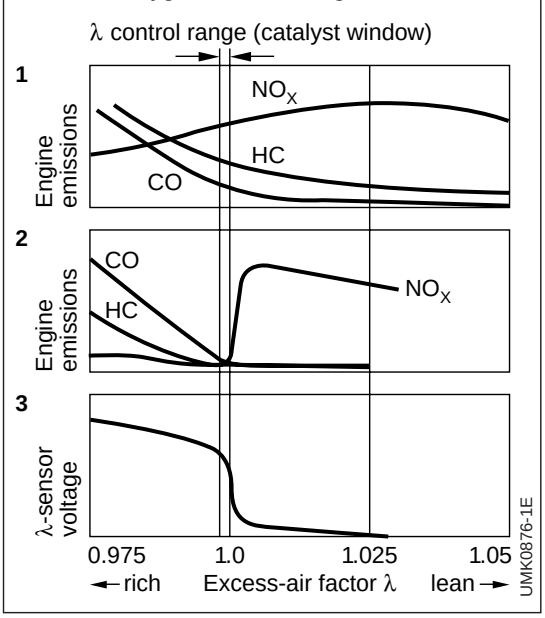

pacts and thermal shocks. The inner cavity is open to the atmosphere, which serves as the unit's reference gas (Figure 2).

Operating concept (two-state sensor)

Two-state sensor operation is based on the Nernst Principle. The sensor's ceramic material conducts oxygen ions at temperatures of roughly 350 °C and above. Disparities in oxygen levels on the respective sides of the sensor will result in generation of electrical voltage between the two surfaces, and it is this voltage that serves as the index of how much oxygen levels vary on the two sides of the sensor. The amount of residual oxygen contained within an internal combustion engine's exhaust gas fluctuates sharply in response to variations in the induction mixture's A/F ratio. Even operation with excess fuel in the mixture produces exhaust gases with residual oxygen. To cite an example, volumetric concentrations of oxygen in the exhaust remain as high as 0.2…0.3 even when the engine is operated at λ = 0.95. Because the exhaust gas' oxygen content varies to reflect differences in A/F ratio, the former can be used to monitor the latter. Oxygen-sensitive voltage generation in the oxygen sensor ranges from 800…1000 mV for rich mixtures (λ < 1) to levels as low as approximately 100 mV for lean mixtures (λ > 1). The transition from rich to lean corresponds to 450…500 mV.

The temperature of the ceramic body joins the oxygen content of the exhaust gas as a decisive factor, as conductivity for oxygen ions varies according to how hot the ceramic is. As a result, the curve for sensor voltage over excess-air factor λ (static characteristic curve) is extremely sensitive to temperature variations, and the basic operating data are understood as applicable at a working temperature of roughly 600 °C. Yet another parameter characterized by extreme sensitivity to thermal variations is the response time that elapses before mixture changes are registered as voltage shifts. Although lag is measured in seconds with the sensor cooler than 350 °C, the sensor responds within less than 50 ms once it has heated to its normal operating temperature of 600 °C. This is reflected in the control pattern employed immediately after engine starts; the lambda closed-loop control remains inactive and the engine relies on open-loop mixture regulation until the sensor heats to its minimum operating temperature of approximately 350 °C.

Fig. 2

Lambda oxygen sensor: Position in exhaust pipe (schematic)

1 Ceramic coating, **2** Electrodes, **3** Contacts, **4** Housing contacts, **5** Exhaust pipe, **6** Ceramic support shield (porous), **7** Exhaust gas, **8** Ambient air, *U* Voltage.

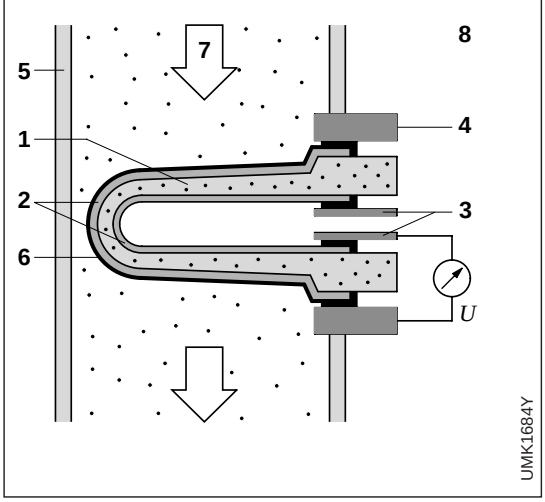

Installation location

Excessive temperatures reduce service life. Thus installation positions where the sensor would be exposed to temperatures in excess of 850 °C during extended WOT operation are ruled out, although brief temperature peaks extending to 930 °C may be tolerated.

Unheated Lambda oxygen sensor

A ceramic support tube and a spring washer retain and seal the active finger-type ceramic elements within the sensor casing (structure similar to that of the heated oxygen sensor in Figure 3, but without heater element). A contact element extending between the support tube and the active ceramic elements furnishes electrical continuity between the interior electrode and the outside connection wire.

The metallic seal connects the external electrode with the sensor casing. A metallic shield that simultaneously serves as the support surface for the spring washer retains the sensor's internal components while also protecting the inside of the unit against contamination. For connection to the outside, the connecting wire is crimped to the sensor's contact element and protected against moisture and physical damage by a heat-resistant cap. A guard tube featuring a special geometry is installed in the exhaust-side of the casing to protect the ceramic element against combustion residue; this tube includes a number of slots specially arranged to protect the sensor against thermal and chemical stress factors.

Heated Lambda oxygen sensor

This sensor relies on an electric heater element to warm the ceramic material when the engine is operating at low load factors (and thus producing low-temperature exhaust gas). At higher load factors the sensor's temperature is determined by the exhaust gas. Because heated O_2 sensors (Figure 3) function even when mounted at substantial distances from the engine, extended WOT operation is not a problem. At the same time, the internal heater quickly warms the unit to its working temperature. This allows the sensor – and thus the closed-loop mixture control system – to assume operation within 20…30 seconds after the engine has started. The heated O_2 sensor helps ensure low and stable emissions thanks to consistent maintenance of optimal operating temperatures.

Planar Lambda oxygen sensor

In its basic operating concept the planar sensor (Figure 4) corresponds to the heated finger-type element sensor by generating a response curve with a characteristic jump at $\lambda = 1$. At the design level the planar sensor is distinguished from the finger-type unit by the following features:

– The solid-body electrolyte consists of ceramic layers,
– A solid ceramic sealant retains the sensor element within the sensor casing,
– A dual-wall guard tube effectively protects the sensor element against excessive thermal and physical stresses.

The individual active layers (Figure 5) are manufactured using silk-screening techniques. Stacking laminated layers with various configurations makes it possible to integrate a heater within the sensor element.

Wide-band Lambda oxygen sensor

The wide-band sensor expands on the principle of the Nernst unit (two-state sensor function) by incorporating a second chamber, the pump cell. It is through a small slot in this pump cell that the exhaust gas enters the actual monitoring chamber (diffusion gap) in the Nernst cell. Figure 6 provides a schematic of this sensor's design. This configuration contrasts with the layout used in the two-state sensor by

Fig. 3

Heated O_2 sensor

1 Sensor housing, **2** Ceramic support tube, **3** Connection wire, **4** Guard tube with slots, **5** Active ceramic sensor layer, **6** Contact, **7** Protective cap, **8** Heater element, **9** Crimped connections for heater element, **10** Spring washer.

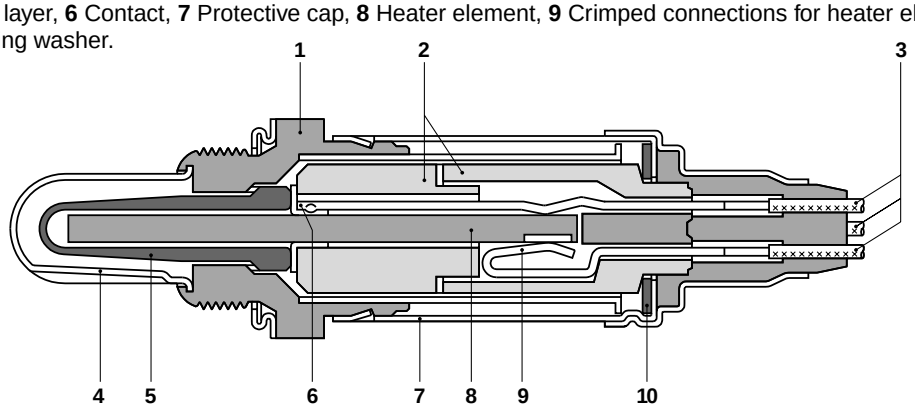

maintaining a consistently stoichiometric A/F ratio in the chamber. Electronic circuitry modulates the voltage supply to maintain the composition of the gas in the monitoring chamber at a consistent $\lambda = 1$. The pump cell responds to lean exhaust by discharging oxygen from the diffusion gap to the outside, but reacts to rich exhaust gas by pumping oxygen from the surrounding exhaust gas into the diffusion gap, reversing the direction of the current. Because the pumping current is also proportional to the oxygen concentration and/or oxygen deficiency, it serves as an index of the excess-air factor of the exhaust gas. An integral heater unit ensures an operating temperature of at least 600 °C.
While the two-state unit uses the voltage at the Nernst cell as a direct measurement signal, the wide-band sensor employs special processing and control circuitry to set the pumping current, which is then monitored and measured as an index of the exhaust gas' excess-air factor. Because sensor operation is no longer dependent on the step-function response of the Nernst cell, air factors ranging from 0.7 to 4 can be monitored as a continuous progression, and lambda control of the engine can proceed based on a reference spectrum, instead of depending solely upon a single point.

Operation of lambda closed-loop control

The oxygen sensor relays a voltage signal to the electronic engine-management

Operational layers in planar O_2 sensor

1 Porous protective layer, **2** External electrode, **3** Sensor laminate, **4** Internal electrode, **5** Reference air laminate, **6** Insulation layer, **7** Heater, **8** Heater laminate, **9** Connection contacts.

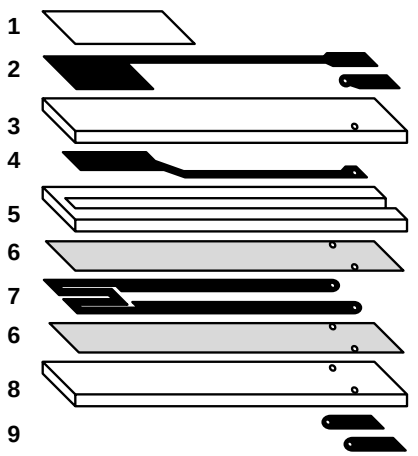

Fig. 5

Fig. 6

Principal design of a continuous-action wide-band Lamba oxygen sensor showing the sensor's installation in the exhaust pipe

1 Nernst cell, **2** Reference cell, **3** Heater, **4** Diffusion gap, **5** Pump cell, **6** Exhaust pipe.

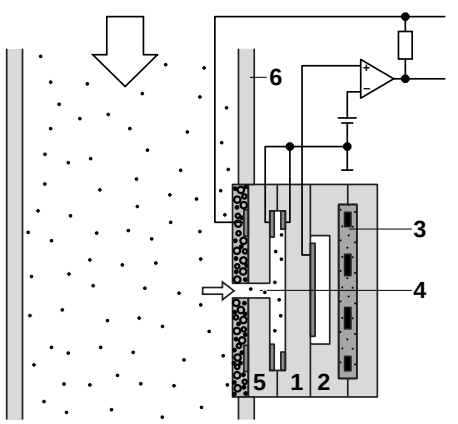

Fig. 4

Planar O_2 sensor

1 Guard tube, **2** Ceramic seal assembly, **3** Sensor housing, **4** Ceramic support tube, **5** Planar sensor element, **6** Protective cap, **7** Connection wire.

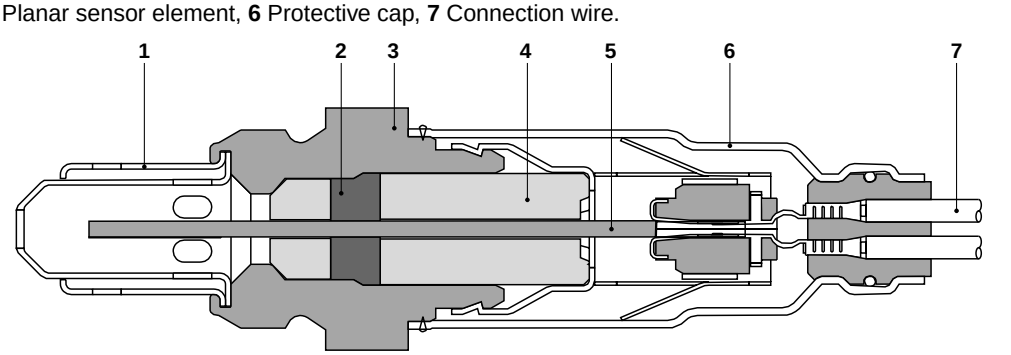

unit, which then issues a command to the mixture-formation unit (injection system or electronically-controlled carburetor) to enrichen or lean out the mixture, as indicated by the oxygen sensor's signal voltage (Figure 7). The system thus counters lean mixtures by increasing the injected fuel quantity and rich mixtures by reducing it.

Two-state control

The engine-management ECU in a two-state control system converts the signal from the oxygen sensor into a two-state signal.

Each jump in the oxygen sensor's voltage provokes a reaction by shifting the lambda closed-loop control parameters in the opposite direction (Figure 8), with the system responding to lean readings with enrichment and vice versa. Typical spikes in the control parameter's step function are in the 3 % range. This means that instantaneous fuel-discharge quantities are multiplied by factor:

– 1.00 under standard conditions,
– 1.03 with lean mixtures, and
– 0.97 with rich mixtures.

Following the jump in the control parameter the "control factor" undergoes a ramp conversion to return the system to operation at a mean value and compensate for interference factors in the pilot control. The control frequency is basically defined by the time that elapses between formation of fresh mixture and registration of the resulting exhaust gas at the lambda oxygen sensor (transport delay, response lag).

This transport delay is the period that always elapses before the oxygen sensor can react to rich or lean induction mixtures with a corresponding voltage shift. This voltage shift, in turn, is the precondition for all mixture adjustments. Yet another transport-delay period must then elapse before the new mixture arrives at the oxygen sensor. Thus the minimum time for one control cycle corresponds to no less than twice the transport delay. Because this transport delay is extremely sensitive to variations in the engine's speed and load factor, ramp rates for implementation in response to jumps in the control parameter also vary to compensate for these two factors and maintain an essentially consistent control oscillation.

Up to now the assumption has been that the system always responds to jumps in the O_2 sensor's voltage by dialing in optimal exhaust-gas compositions. However, the intensity of the voltage jump varies according to the composition and temperature of the gas, so the voltage change displays a slight stoichiometric offset. A controlled rich and lean offset is thus employed to compensate for all of the factors that can distort the sensor's response curve. This strategy maintains the control parameter for a regulated dwell period t_v even in the face of a new sensor jump. This dwell period is stored in a program map with definitions for various engine speeds and load factors.

Fig. 7

Schematic diagram of lambda closed-loop mixture control

1 Mass airflow sensor, **2** Engine, **3a** Oxygen sensor 1, **3b** Oxygen sensor 2 (only if required), **4** Catalytic converter, **5** Injectors, **6** ECU.
U_S Sensor voltage, U_V Valve control voltage, V_E Injection quantity.

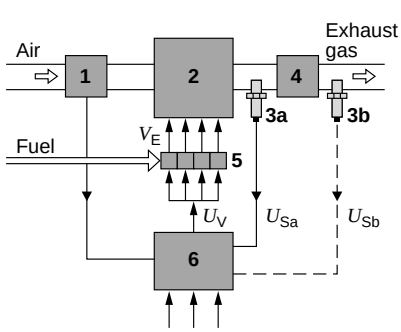

Dual-sensor control

In systems designed to comply with the most stringent emissions regulations, the primary oxygen sensor (the "cat-forward" unit located on the catalyst's engine side) is supplemented by a second sensor located behind the converter. Because it monitors the exhaust gas after it has passed through the catalyst and attained stoichiometric balance, it helps provide

more precise operation, and is suitable for use in correcting the closed-loop control data provided by the cat-forward sensor.
Lag arising from gas transit periods renders it impossible to implement lambda control strategies based exclusively on a cat-back sensor. Instead, the cat-back catalytic converter manipulates dwell period t_v in order to slowly correct the cat-forward catalytic converter.
The cat-back unit also can be used to compensate for shifts in the characteristic response curve of the cat-forward oxygen sensor. Systems featuring two oxygen sensors are therefore characterised by substantially improved long-term emission-control stability.

Fig. 8

Control parameter curves with regulated lambda shift (dual-threshold control)

t_v Residence time after sensor jump.

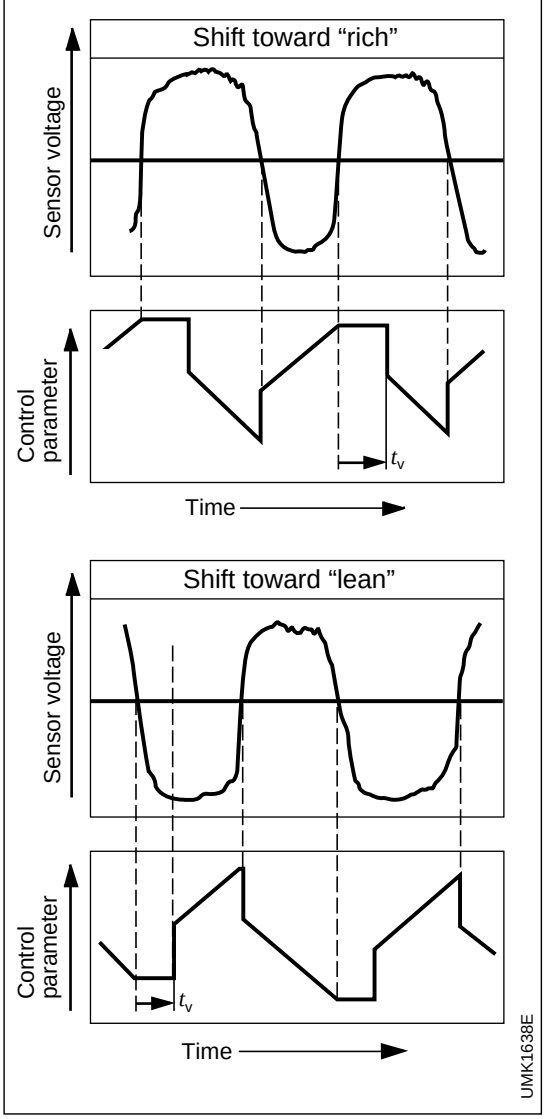

Continuous lambda control
The planar wide-band oxygen sensor is an advanced version of the sensors described above. It consists of a combination of two cells incorporating special electronic control circuitry.
While the two-state sensor can only indicate two states – rich and lean – with a corresponding voltage jump, the wide-band sensor monitors deviations from $\lambda = 1$ by transmitting a continuous signal. This wide-band sensor thus makes it possible to implement lambda control strategies based on continuous instead of two-state information.
The advantages are:
– A substantial improvement in dynamic response, with quantified data on deviations from the specified gas composition, and
– The option of adjusting to any desired mixture strength, i.e., including air factors other than $\lambda = 1$.

The second option is especially significant for strategies seeking to exploit the fuel-saving potential of lean operation (lean-burn concepts). It will be noted that this entails using catalysts capable of converting the nitrous oxides in the exhaust gas during lean operation.

Catalytic exhaust-gas treatment

Catalytic-converter systems

Four different kinds of catalytic-converter system are available to suit different emissions concepts and applications.

Oxidation catalytic converter
The oxidation (or single-bed) catalytic converter operates with excess air, and employs oxidation, i.e. combustion, to convert hydrocarbons and carbon monoxide into water vapor and carbon dioxide. Oxidation catalytic converters provide virtually no reduction in nitrous oxides. With fuel-injection engines, the oxygen required for oxidation is usually obtained from lean induction mixtures ($\lambda > 1$). Carburetor engines rely on engine-driven centrifugal pumps or self-priming air

valves to inject "secondary air" into the exhaust stream before it reaches the catalytic converter (Figure 9a).
Oxidation catalytic converters were originally introduced in 1975 to comply with then-current US emissions regulations, but are now virtually extinct.

Dual-bed catalytic converter

The dual-bed catalytic converter consists of two catalytic elements installed in series (hence the name "dual-bed"). This strategy works only when the engine is operated on a rich mixture ($\lambda < 1$), viz., with air deficiency. The exhaust gas flows through a reduction catalytic converter before proceeding through an oxidation catalytic converter, with air being injected between these two elements. The first catalyst converts nitrous oxides, while the second transforms hydrocarbons and carbon monoxide. Because it depends on rich induction mixtures to work, the dual-bed concept is the least attractive strategy from the fuel-economy standpoint. An advantage is that it is suitable for use in combination with simple mixture-formation systems, without electronic control. A further disadvantage is that ammonia (NH_3) is produced during reduction of nitrous oxides in lean mixtures. A portion of this ammonia then reoxidizes back into nitrous oxides during subsequent air injection.
With this design, conversion of NO_X is significantly less effective than with a single-bed 3-way catalytic converter operating with lambda closed-loop control.
The dual-bed catalytic converter was once popular among US vehicle manufacturers, but is now rare. In the US dual-bed concepts were often used together with lambda mixture control, but this strategy is not only very complex, it also suffers from the problems with nitrous oxide emissions described above (Figure 9b).

3-way catalytic converter

The prime asset of the three-way (or single-bed) catalytic converter is its ability to remove large proportions of all three pollutants (thus 3-way).
The primary requirement is that the engine's induction mixture – and with it the exhaust gas – maintain a consistently stoichiometric A/F ratio (refer to section on "Lambda closed-loop control"). The 3-way catalytic converter combines with lambda closed-loop control to form the most effective pollutant-reduction system currently available. This is why it is used to comply with the most stringent emissions limits (Figure 9c).
Three-way catalytic converters for aftermarket installation are also available in kit form. Although these kits obviously cannot achieve the high levels of conversion achieved using lambda closed-loop control, they are able to reduce pollutants by roughly 50 %.

NO_X storage catalytic converter

Exhaust gases from engines that operate on air/fuel mixtures with only limited oxygen ($\lambda > 1$ with lean-burn concepts, direct-injection systems on part-throttle, etc.) display substantially higher concentrations of NO_X than the exhaust generated by conventional powerplants.
The NO_X storage catalyst displays the greatest potential for reducing concentrations of NO_X in the exhaust gas. It uses the oxygen available in lean exhaust gases to store nitrous oxides as nitrates on its active surfaces. However, the storage catalyst must be regenerated when its capacity is exhausted. The regeneration strategy entails a temporary switch to engine operation on a homogenous rich mixture to promote reduction of nitrates to nitrogen in a process largely supported by CO. The engine-management ECU relies on stored data describing the converter's absorption and desorption properties as the basis for regulating the storage and regeneration phases. oxygen sensors located in both cat-forward and cat-back positions monitor the emissions values.
The cycles in which the engine operates on the homogenous rich mixture last only a few seconds. A vital consideration is transition tuning, to avoid undesirable changes in engine response in the form of sudden torque jumps.

Substrate systems

The catalytic converter (or, more precisely, the “catalytic exhaust-gas converter”) consists of a metal housing, a substrate and the actual active catalytic layer (the catalyst).

There are three different substrate systems:

– Pellets (obsolete),
– Ceramic monoliths, and
– Metallic monoliths.

Ceramic monoliths

These are ceramic bodies perforated by several thousands of channels serving as exhaust channels. The ceramic material is a magnesium-aluminum silicate designed to withstand extreme heat. The monolith, which is extremely sensitive to mechanical tension, is mounted within a metal housing. Between the housing walls and the substrate is a flexible metal screen made of high-alloy steel wire featuring a diameter of approximately 0.25 mm. The screen must be flexible enough to compensate for such factors as production tolerances, the different expansion coefficients of housing and substrate material, mechanical stresses associated with vehicle operation, and the gas forces exerted against the ceramic body (Figure 10). Ceramic mono-

Fig. 9

Catalytic systems

a Single-bed oxidation catalytic converter, **b** Dual-bed catalytic converter, **c** Single-bed catalytic converter.
1 Mixture formation/injection system, **2** Secondary-air injection, **3** Oxidation catalytic converter for HC, CO,
4 NO_X reduction catalytic converter, **5** Electronic control unit, **6** Lambda O_2 sensor,
7 3-way catalytic converter for NO_X, HC, CO. U_S Sensor voltage, U_V valve control voltage.

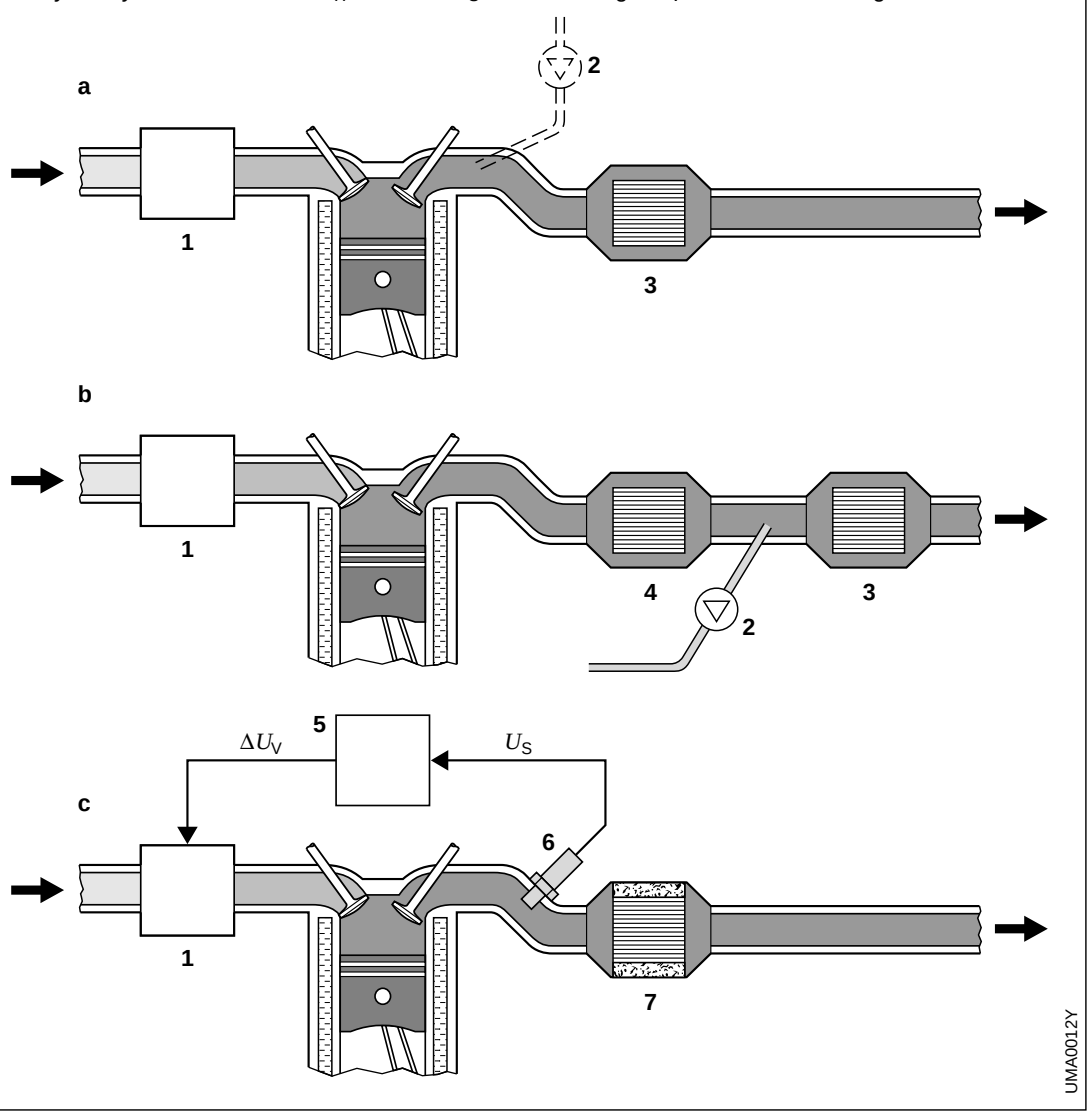

liths are currently the most frequent substrate concept for catalytic converters. This configuration is used by all European manufacturers and has largely superseded the earlier pellet technology in the US and Japan.

Metallic monoliths

Metallic monoliths have seen only limited use up to now. They are primarily installed as pre-catalysts (start-up catalysts) mounted in the immediate vicinity of the engine, where they provide more rapid catalytic conversion following cold starts. The major impediment to application as primary catalysts is their high cost compared to ceramic monoliths.

Coatings

While the catalytically-active substances can be applied directly to pellets, ceramic and metallic monoliths are dependent on a “wash coat” of aluminum oxide. This substrate coating increases the effective surface area of the catalytic converter by a factor of roughly 7,000. In oxidation-type catalytic converters the actual catalytic layer applied to the wash coat consists of the noble metals platinum and palladium, while platinum and rhodium are used in 3-way catalytic converters (Figure 10). Platinum accelerates the oxidation of hydrocarbons and carbon monoxide, while rhodium promotes reduction of nitrous oxides. The noble metals in each catalytic converter usually amount to between 2 and 3 grams.

Operating conditions

In the catalytic converter, as with the O_2 sensor, operating temperature is a vital factor. The unit must warm beyond roughly 250 °C before it can assume genuinely effective pollutant conversion, while ideal conditions for high conversion rates and long service life prevail in a temperature range of approximately 400…800 °C. Heat in the 800 °C to 1,000 °C temperature range sinters the noble metals to the Al_2O_3 substrate layer, reducing the effective catalytic surface and promoting thermal aging. The amount of time spent operating in this range is thus a consideration of vast importance. The radical rise in thermal fatigue that sets in above 1,000 °C leads to rapid degeneration in the catalytic converter, which soon becomes virtually useless. These thermal considerations effectively limit the range of potential installation positions, and the ultimate choice must necessarily assume the form of a compromise. Coatings with improved thermal stability (with the critical threshold being raised to approximately 950 °C) are expected to ease the situation in the future. When operated under favorable conditions a catalytic converter

Fig. 10

3-way catalytic converter with O_2 sensor

1 Lambda O_2 sensor, **2** Ceramic monolith, **3** Flexible metal screen, **4** Heat-insulated dual shell, **5** Platinum, rhodium coating, **6** Ceramic or metallic substrate.

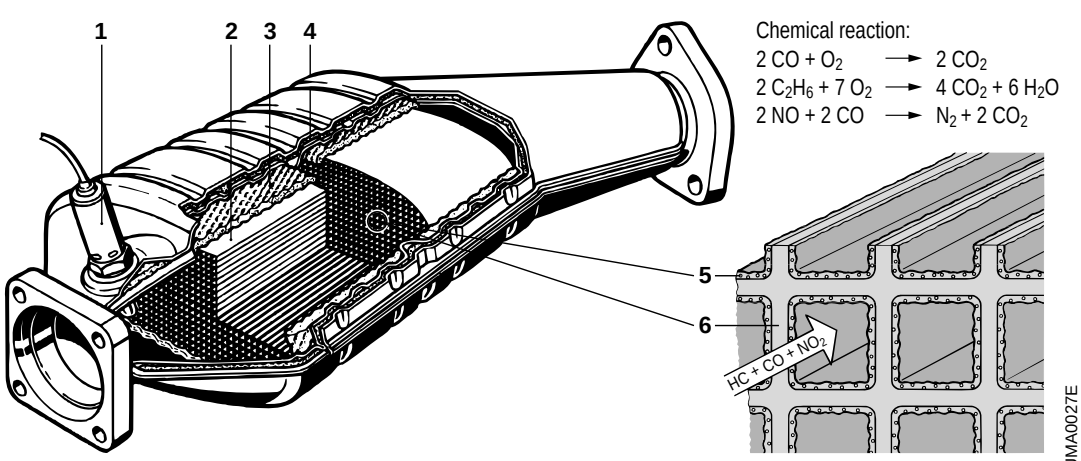

can last for up to 100,000 kilometers (62,000 miles). On the other hand, engine malfunctions such as misfiring can raise catalyst temperatures beyond 1,400 °C, melting the substrate materials and leading to the converter's complete destruction. A major element in preventing these kinds of developments is an extremely reliable, maintenance-free ignition system; electronic ignition systems make an important contribution by satisfying these criteria. Yet another condition for reliable long-term operation is the exclusive use of unleaded fuel for engine operation. Lead deposits form in and on the pores of the active catalytic surfaces to reduce their number. Residue from engine oil can also "poison" the catalytic converter.

Other options

Lean-burn concepts

Pollutant reduction based on the catalytic converter is an "external process" without any direct influence on the engine's internal combustion process. Yet another strategy relies on modifying "internal processes" by focusing on such factors as combustion-chamber design, valve timing, exhaust-gas recirculation, compression ratio, ignition timing and A/F ratios. By directly affecting the combustion process, these strategies can exert a considerable influence on exhaust emissions, even if the ultimate effects are not as pronounced as those achieved with catalytic exhaust-gas treatment. Modifications to these "internal processes" are applied in lean-burn concepts.

The lambda excess-air factor – the air/fuel mixture ratio used to operate the engine – has a dramatic effect on concentrations of hydrocarbons (HC), carbon monoxide (CO) and nitrous oxides (NO_X) while also serving as a prime determinant of fuel economy. HC and CO emissions rise in the rich range and sink to minimum levels under lean operation. This pattern is reflected by fuel consumption. Nitrous oxides present a contrasting picture by peaking under slightly lean mixtures ($\lambda = 1.05$).

Prior to 1970, engines were designed to run on rich mixtures to ensure high performance and good handling. Then increasingly severe emissions legislation forced designers to raise A/F ratios, and engines had to start operating on excess air. The primary benefits of the new leaner mixtures were reductions in emissions of HC and CO, and substantial improvements in fuel economy, but these though were all at the cost of higher nitrous-oxide emission levels. Specifically for lean-burn operation therefore, in order not to impair handling and driveability, the designers were forced to continually improve both the engines themselves and their mixture-formation systems. More precise definition and control of ignition timing also became imperative. These developments have lead to increasing use of engine-management systems featuring electronic ignition as a means of ensuring optimal spark advance to maximize fuel economy and minimize emissions.

Lean-burn engine

Consistent optimisation of combustion-chamber design combined with flanking measures outside the chamber (for instance, promoting intake swirl) led to the design of a lean-burn engine capable of operating at excess-air factors in the $\lambda \approx 1.4$ range. Although the lean-burn engine combines lower emissions with improved fuel economy, it still depends on catalytic exhaust treatment to bring HC and CO levels into compliance with "severe" emissions standards. Because it has not yet proven possible to meet the strict US emissions regulations with a lean-burn engine, this concept has remained in an outsider's role, despite its attractive fuel-economy figures.

Thermal afterburners

In the days before today's catalytic treatment of exhaust emissions became standard, early attempts at emissions reduction focused on thermal afterburning. This method retains the exhaust gases in a high-temperature atmosphere for a specified period to burn exhaust components that failed to combust in the engine's cylinders. Supplementary air injection is required to support this combustion process during operation in the rich range (λ = 0.9…1.0), but during lean operation (λ = 1.1…1.2) the exhaust gas contains enough oxygen to support the process unassisted.

Today thermal afterburners are totally insignificant, due to their having no potential for meeting low NO_X limits. However, the concept can be employed to reduce emissions of HC and CO in the warm-up phase, before the catalytic converter reaches its normal operating temperature. Thus thermal aftertreatment with secondary-air injection represents an option for compliance with tomorrow's more stringent limits by reducing the emissions produced by the engine in its warm-up phase.

Secondary-air injection

Supplementary air can be injected immediately downstream from the combustion chamber to promote secondary combustion in the hot exhaust gases. This "exothermic" reaction not only reduces levels of hydrocarbons (HC) and carbon monoxide (CO), it also heats the catalytic converter.

This process substantially enhances the catalytic converter's conversion rate in the warm-up phase. The primary components of the secondary-air injection system (Figure 11) are the:

– Electric secondary-air pump (6),
– Secondary-air valve (5) and the
– Non-return valve (4).

Thermal reactors

When the engine is run with rich air-fuel mixtures, it generates exhaust gases with very high concentrations of HC and CO. This mixture of exhaust gases and air is retained in the thermal reactor for as long a period as possible and ignited there at high temperatures in order to oxidise the pollutants. Although thermal reactors can reduce HC emissions by roughly 50 %, the concept also leads to increases of up to 15 % in fuel consumption. This is why thermal reactors were used for only a brief period prior to the advent of catalytic-converter technology.

Overrun fuel cutoff

Yet another strategy for reducing emissions of HC and CO relies on switching off the fuel supply during closed-throttle operation (overrun). Overrun generates high levels of vacuum within the engine's intake tract and therefore in the combustion chambers. The mixture's low oxygen content makes it difficult to ignite during this type of operation, and combustion remains incomplete, leading to higher emissions of hydrocarbons and carbon monoxide. Complete interruption of the fuel supply during overrun operation prevents production of uncombusted pollutants.

In systems such as KE-Jetronic, continuous injection ensures smooth and seamless transitions between the function's active and passive states. The overrun cutoff responds to coolant temperature. To inhibit continuous "hunting"

Fig. 11

Secondary air injection

1 Intake air, **2** Engine, **3** Secondary air,
4 1-way check valve, **5** Secondary-air valve,
6 Electric secondary-air pump,
7 Lambda O_2 sensor, **8** Catalytic converter,
9 Exhaust gas.

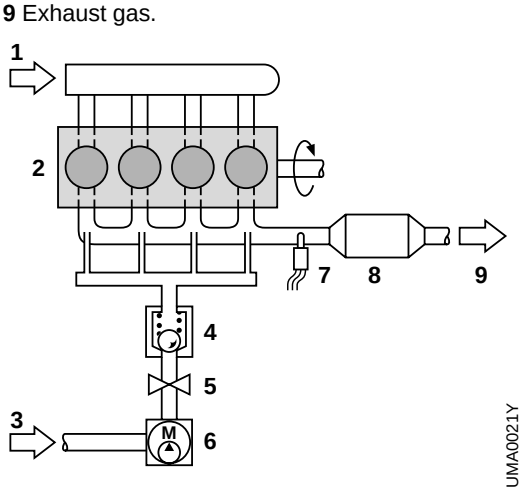

during steady-state operation, the system varies the activation point according to the direction in which engine speed changes (hysteresis). The activation thresholds used with the engine warmed to its normal operating temperature are defined as low as possible to maximize fuel savings.
Pollutant emissions from the spark-ignition engine can be curtailed by choosing from a wide and variegated range of available options. The ultimate selection of technical solutions therefore, is affected by numerous considerations, among which official legislation on emissions is far from being the least important.

Testing exhaust and evaporative emissions

Test technology

Test cycles

To precisely measure a passenger car's emission levels, the vehicle must be tested in an emissions test cell under standardized conditions designed to accurately reflect real-world driving conditions. Compared with highway driving, a major advantage of operation in a test cell is that it permits precisely defined speed curves to be closely adhered to, and there is no need to adapt and react to traffic conditions. This is essential for conducting emissions tests that will provide mutually comparable results.
The test vehicle is parked with its wheels resting on special rollers. The rollers' resistance to motion can be adjusted to simulate friction losses and aerodynamic drag, and inertial mass can be added to simulate the vehicle's weight. The required cooling is furnished by a fan mounted a short distance from the vehicle.
Emissions are measured based on a precisely-defined, simulated driving cycle. The exhaust gases generated during this cycle are collected for subsequent analysis of pollutant mass.
Although officially prescribed procedures for collecting exhaust gases and determining emissions levels have been standardized at the international level, this does not apply to the actual driving cycles. In some countries regulations governing exhaust emissions are supplemented by limits on evaporative emissions from the fuel system.

Chassis dynamometer

To ensure comparable emissions data, the temporal progression curves for the speeds and forces acting on the vehicle during the simulated cycle on the chassis dynamometer must precisely coincide with those for highway operation. Eddy-current brakes and DC motors produce loads to simulate vehicular inertia, rolling resistance and aerodynamic drag. These speed-sensitive loads are applied to the vehicle through the rollers, and represent the resistance forces that the vehicle must overcome during the cycle. Rapid couplings are employed to connect the rollers to various inertial masses as a means of simulating the vehicle's mass. The progression curves for braking force must be maintained in a precise relationship to vehicle speed and inertial mass, as any deviations will lead to inaccurate test results. Test results are also influenced by such factors as atmospheric humidity, ambient temperature and barometric pressure.

Driving cycles

To ensure that test results remain mutually comparable, the speeds used on the dynamometer must accurately reflect actual highway operation. Testing is based on a standardized driving cycle in which shift points, braking manœuvres, idling and stationary phases have all been selected to reflect the traffic conditions typically encountered in large urban areas. Seven different test cycles are in use at the international level. Within Europe, the EU Stage III sequence (valid from January 2000) will feature a

shorter driving cycle (the 40-second preliminary phase is deleted), but the US is adding the SFTP test containing a special assessment of vehicles with air conditioning as well as several new operating modes.
Usually a driver sits in the vehicle, maintaining the speed sequence indicated on a display screen.

Test samples and dilution procedures (CVS method)
With European adoption of the constant-volume sampling (CVS) method in 1982, there is now basically one single internationally recognized procedure for collecting exhaust gases.

Test sampling and emissions analysis
The dilution process employs the following principle:
The exhaust gases emitted by the test vehicle are diluted with fresh air at a ratio of 10:1 before being extracted using a special system of pumps. These pumps are arranged to maintain a precise, constant ratio between the flow volumes for exhaust gas and fresh air, i.e., the air feed is adjusted to reflect the vehicle's instantaneous exhaust volume. Throughout the test a constant proportion of the diluted exhaust gas is extracted for collection in one or several sample bags. Upon completion of the test cycle, the pollutant concentration in these bags precisely mirrors mean concentration levels in the overall mixture of fresh air and exhaust gases. As it is possible to monitor the total volume of fresh air and exhaust mixture, pollutant concentration levels can be employed to calculate the masses of these substances emitted during the test cycle. Advantages of this procedure: The condensation of the water vapor contained in the exhaust gas is avoided, otherwise this would lead to a sharp reduction in the NO_X losses in the bag. In addition, dilution greatly inhibits the tendency of the exhaust components (especially the hydrocarbons) to engage in mutual reactions.

Fig. 1

Test layouts

a For US Federal Test (shown here with venturi system), **b** For European test (shown here with rotary-piston compressor).
1 Brake, **2** Rotating mass, **3** Exhaust gas, **4** Air filter, **5** Dilution air, **6** Cooler, **7** Test-sample venturi nozzle, **8** Gas temperature, **9** Pressure, **10** Venturi nozzle, **11** Fan, **12** Sample bag, **13** Rotary-piston blower, **14** To discharge.
ct Exhaust gases in transition phase, s Exhaust gases in stabilized phase, ht Exhaust gases from hot test.

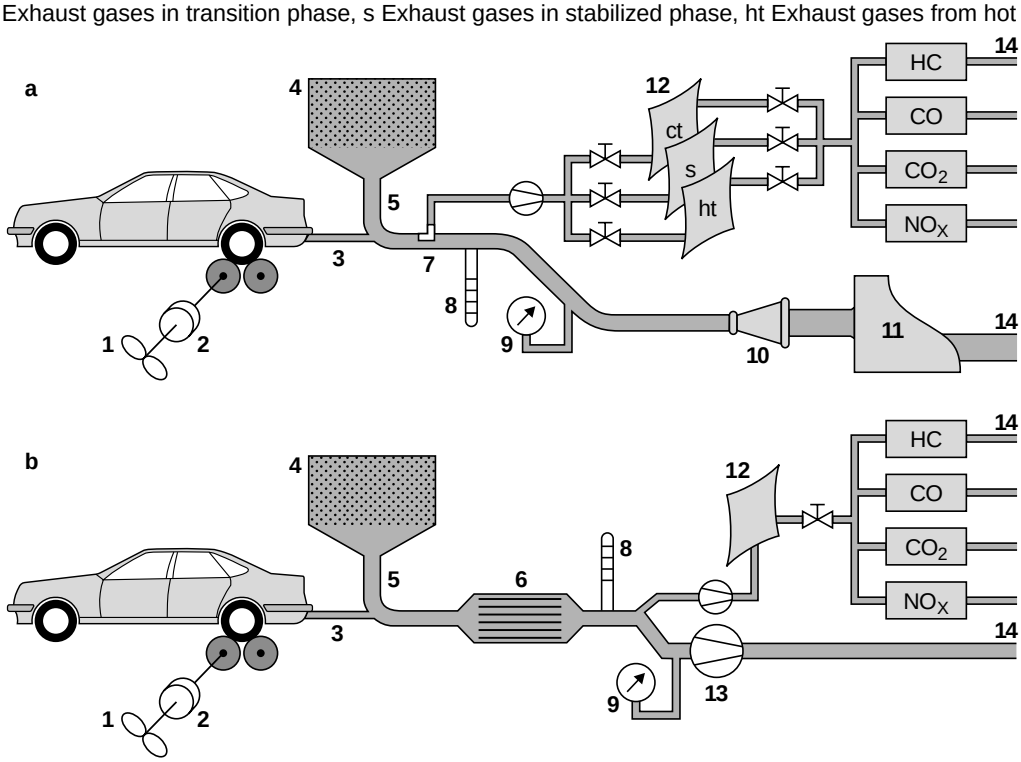

However, dilution does mean that pollutant concentrations decrease proportionally to mean dilution ratio, so high-precision analyzers become essential. Standardized devices are available for analyzing the concentrations of individual substances in the test bags.

Dilution equipment

Either one of two different but equally acceptable pump arrangements is generally employed to maintain the constant flow volume required for testing. In the first, a standard blower extracts the mixture of fresh air and exhaust gas through a venturi tube; the second concept relies on a special vane pump (Roots blower). Both methods are capable of metering flow volume with an acceptable degree of accuracy.

Quantifying fuel-system evaporative losses (evaporation tests)

In addition to and separate from the emissions generated during the engine's combustion process, motor vehicles also emit hydrocarbons (HC) in the form of evaporative emissions escaping from the gas tank and fuel system. Actual levels vary according to fuel-system design and fuel temperature. Some countries (including the USA and a number of countries in Europe) already limit maximum acceptable levels of evaporative emissions.

SHED test

The SHED test is the most common procedure for determining evaporative emissions. It comprises two test phases – distinguished by different conditioning procedures – conducted in a gas-tight enclosure (SHED tent).

The first phase of the test proceeds with the fuel tank filled to approximately 40 % of its overall capacity. The test fuel is warmed from its initial temperature of 10…14.5 °C, with actual monitoring of HC concentrations within the enclosure starting once it reaches 15.5 °C. The fuel temperature is increased by 14 °C in the following hour, after which testing is concluded with a final sampling of the HC concentration. Evaporative emissions levels are determined by comparing the initial and final measurements. The vehicle's windows and trunk lid must remain open for the duration of the test.

The vehicle is prepared for the second phase of testing by being taken for a "warm-up drive" through the applicable official urban test cycle. The vehicle is then parked in the test chamber for one hour; the test monitors the increases in HC concentrations produced by the vehicle as it cools.

The sum of the results from both tests must be less than the current limit of 2 g hydrocarbon vapor. A more stringent SHED test procedure has now been mandated for the US.

ECE/EU test cycle and limits

The ECE/EU test cycle relies on a hypothetical driving curve (Figure 2) designed to serve as a reasonably accurate reflection of operating conditions in an urban center. In 1993 this test cycle was supplemented by a rural phase including speeds of up to 120 km/h. This new ECE/EU test cycle is currently mandatory in the following countries: Austria, Belgium, Denmark, Finland, France, Germany, Great Britain, Greece, Ireland,

Fig. 2

ECE/EU test cycle with rural highway phase

1 Conditioning (no measurement): was 40 s, deleted from EU Stage III onward.
Cycle distance: 11 km.
Average speed: 32.5 km/h
Maximum speed: 120.0 km/h

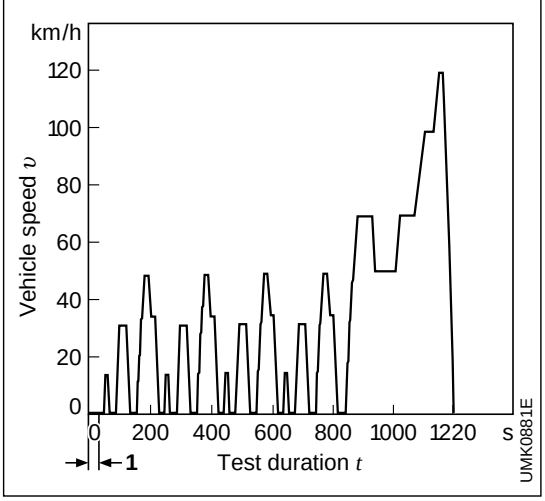

Italy, Luxembourg, Netherlands, Portugal, Spain, Sweden.

Testing proceeds as follows:
After initial conditioning (vehicle parked at a room temperature of 20…30 °C for at least 6 hours), the actual test cycle commences following a cold start and a 40-second warm-up period (this preliminary phase has been deleted from EU Stage III and future tests). During the test, the CVS method is used to collect exhaust gases in a sample bag. The European test mirrors standard practice by converting the mass pollutant levels of the gas contained in the bags for quantification relative to test distance. Hydrocarbons and nitrous oxides are currently subject to a cumulative limit (HC + NO_X), but EU Stage III will see the introduction of separate and distinct limits for these two substances.
More stringent limits applicable to all vehicles regardless of engine piston displacement have been in effect since 1992. The data from the corresponding directive, EEC 91/441 (EU Stage I), are provided in Table 1 in the section on emissions limits. This standard also prescribes limits for evaporative emissions. The directive EEC/94/12 (EU Stage II) brought further reductions in emissions limits for 1996/97.
The European limits are slated for further tightening (Stage III and IV, 2000 and 2005):
– Cold start at –7 °C (starting in 2002),
– EOBD (European On-Board Diagnosis) for emissions-relevant components,
– Stricter evaporative emissions test,
– Long-term reliability (80,000; 100,000 km) and arrangements to monitor performance in the field,
– Exhaust sampling begins immediately after the vehicle starts.

US test cycles

FTP-75 test cycle
The FTP (Federal Test Procedure) 75 test cycle comprises three phases. The sequences and speed curves are designed to reflect the conditions measured in actual morning commuter traffic on the streets of Los Angeles (Figure 3a):
The test vehicle is first conditioned by being left parked for 12 hours at an ambient temperature of 20…30 °C. It is then started and driven through the prescribed test cycle:
Phase ct: Diluted exhaust gases are collected in Bag 1 during the cold transition phase.
Phase s: Exhaust samples are diverted to Bag 2 at the beginning of the stabilized phase (after 505 s) without any interruption in the program sequence. The engine is switched off for a 10-minute pause immediately following completion of the stabilized phase (after 1,372 seconds).
Phase ht: The engine is restarted for the hot test (lasting 505 seconds). The speed sequence used in this phase is identical to the one employed for the cold transition test. The exhaust gases generated in this phase are collected in a third bag. As the probes should not remain in the bags for more than 20 minutes, the samples from the previous phases are analyzed before the hot test.
The exhaust-gas sample from the third bag is then analyzed upon completion of this final driving sequence. The weighted sum of the masses of all pollutants (HC, CO and NO_X; ct 0.43, s1, ht 0.57) is then calculated relative to the distance covered and expressed as emissions per mile.The maximum permitted emission quantities differ in the various countries. This test procedure is used throughout the US including California ("Emissions limits," Table 2) and in several other countries (Table 4).

SFTP cycles
Testing according to the SFTP standard is slated for introduction between 2001 and 2004. The process combines three driving cycles, FTP 75, SC03 and US06, and expands upon earlier procedures to embrace the following supplementary operating conditions (Figure 3b, c):
– Aggressive driving,
– Abrupt changes in vehicle speed,

– Engine start and initial acceleration from standing start,
– Operation with frequent speed changes of minimal amplitude,
– Parked periods, and
– Operation with air conditioner.

Following initial conditioning, the SC03 and US06 cycles proceed through the ct phase of FTP 75 without exhaust gases being collected, although other preconditioning options are available.

The SC03 cycle proceeds at 30 °C with a relative humidity of 40 % (vehicles with air conditioning only). The individual driving cycles are weighted as follows:
– Vehicles with air-conditioning: 35 % FTP 75 + 37 % SC03 + 28 % US06
– Vehicles without air-conditioning: 72 % FTP 75 + 28 % US06.

Vehicles must absolve the SFTP and FTP 75 test cycles separately (Tables 2 and 3 in “Emissions limits”).

Test cycles for determining average fleet fuel consumption

Each vehicle manufacturer must determine average fuel consumption for its vehicle fleet as a whole. Penalties are imposed upon manufacturers who fail to meet specified limits, while a bonus is available when test results fall below a prescribed threshold. Fuel consumption is determined using the exhaust gases generated in two test cycles: the FTP 75 test cycle (55 %) and the highway test (45 %). After prior conditioning (parked at 20…30 °C for 12 hours) the vehicle

Fig. 3

US test cycles

	a	b	c	d
Test cycle	**FTP75**	**SC03**	**US06**	**Highway**
Cycle distance:	17.87 km	5.76 km	12.87 km	16.44 km
Cycle duration:	1877 s + 600 s Pause	594 s	600 s	765 s
Average cycle speed:	34.1 km/h	34.9 km/h	77.3 km/h	77.4 km/h
Maximum cycle speed:	91.2 km/h	88.2 km/h	129.2 km/h	96.4 km/h

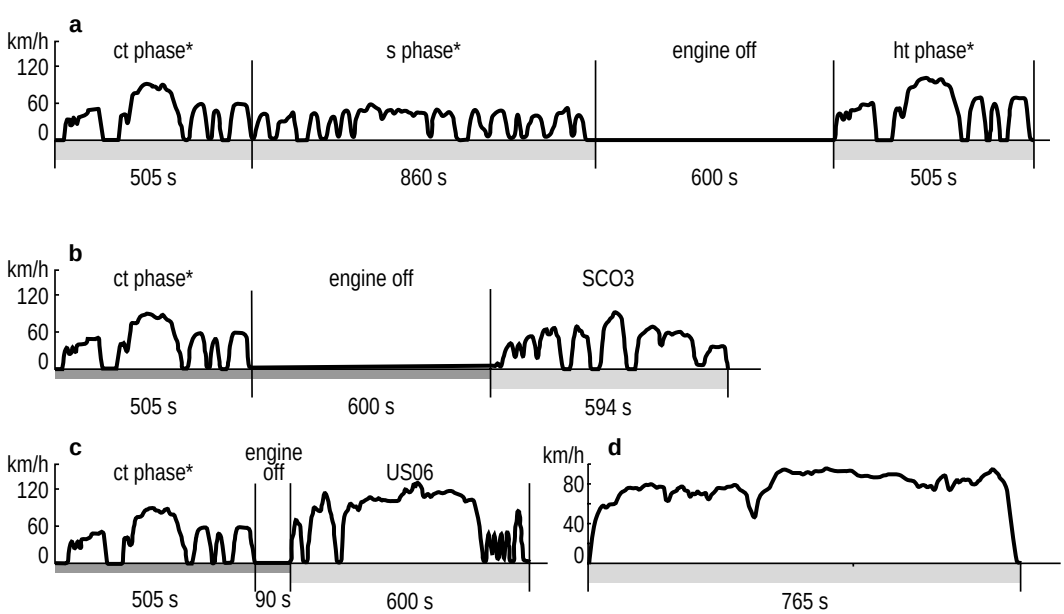

* ct Transition phase; s Stabilized phase, ht Hot test
Phases with exhaust-gas collection
Conditioning (instead, other driving cycles can also be used here)

UWT0003-1E

makes one unmonitored run through the highway test cycle; this is followed by a second cycle, this time with collection of the exhaust gases. The emissions are then used as the basis for calculating fuel consumption (Figure 3d).

Every newly licensed vehicle must continue to comply with these limits (regardless of vehicle weight or displacement) over a minimum distance of 50,000 miles. The US grants waivers for vehicles from specific model years under certain conditions, and two qualification mileages are available: 50,000 and 100,000 miles. The approved limits for 100,000 miles are higher (wear factor).
Legislation has been passed ("Clean Air Act") which, while containing numerous initiatives for protection of the environment, also prescibes stricter emissions limits for vehicles manufactured from the 1994 model year onward (Table 2). California enacted stricter emissions standards as early as 1993 and is also planning further drastic action.
The cold-start enrichment required when vehicles are started at cold temperatures produces brief peaks in emissions that are not covered by the current test procedure (at an ambient temperature of 20…30 °C). The Clean Air Act seeks to limit this cold-start pollution with the introduction of an emissions test conducted at –6.7 °C, although this test only allocates a limit to carbon monoxide.

Fig. 4

Japanese test cycles

a 11 mode cycle (cold test)

Cycle distance:	1.021 km
Cycle no./test:	4
Average speed:	30.6 km/h
Maximum speed:	60 km/h

b 10·15 mode cycle (hot test)

Cycle distance:	4.16 km
Cycle no./test:	1
Average speed:	22.7 km/h
Maximum speed:	70 km/h

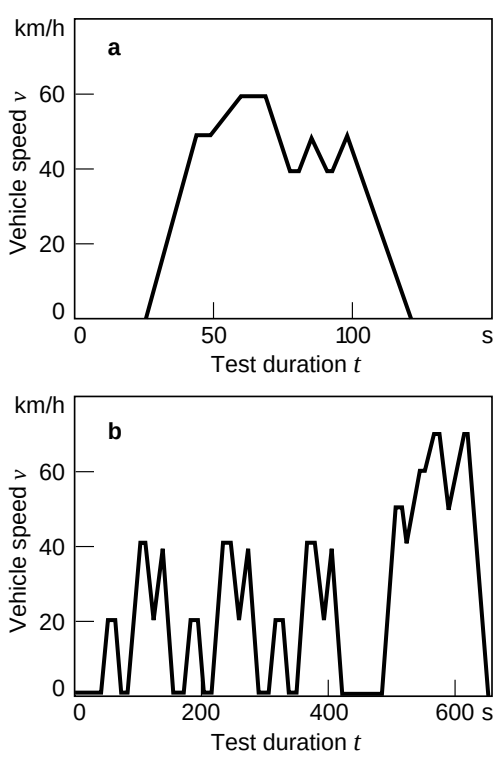

Japanese test cycle

Two test cycles with different hypothetical driving curves are included in this composite test:
Following a cold start, the vehicle proceeds to absolve the 11-mode cycle four times in succession, and all four cycles are evaluated. The vehicle runs through the 10·15 mode test as a hot test (Figure 4).
Preconditioning for the hot start includes the prescribed idling-emissions test, and proceeds as follows:
First, the vehicle is driven through a 15-minute warm-up phase at 60 km/h. Concentrations of HC, CO and CO_2 are then measured in the exhaust pipe. The 10·15 hot test starts after a further 5-minute warm-up period at 60 km/h. The CVS method forms the basis for exhaust-gas analysis in both the 11 mode and the 10·15 mode tests. The diluted gas is collected in separate bags. Emission limits for the cold test are specified in g/test, while the limits for hot testing are expressed relative to distance, viz., converted to grams per kilometer (Table 5 in "Emissions limits" section).
Japanese regulations include limits on evaporative emissions as determined in testing using the SHED method.

Exhaust-gas analyzers

Legislation reflects governmental efforts to reduce the quantities of toxic substances in exhaust gases by mandating regular periodic emissions testing for vehicles already in service. In Germany compliance with specified CO limits is verified at prescribed intervals in an emissions inspection (AU, or Abgasuntersuchung) as defined in § 29 of the StVZO (FMVSS/CUR). Exhaust-gas analyzers are also indispensable tools for general automotive service, useful for correct mixture adjustment as well as efficient fault diagnosis on the engine.

Test procedures

It is necessary to carry out precise measurements of the individual exhaust-gas components. While test laboratories rely on complex procedures, automotive service facilities have adopted the infrared method on a widespread basis. The concept is based on the fact that individual exhaust-gas components absorb infrared light at different specific rates according to their characteristic wavelengths.

Available units include single-component analyzers (e.g., for CO) as well as devices for measuring several substances (for CO/HC, CO/CO_2, CO/HC/CO_2, etc.).

Test chamber (Fig. 5)

Infrared radiation is transmitted from an emitter (5) heated to approximately 700 °C. The infrared beam passes through a measuring cell (3) before entering the receiver chamber (1). If CO content is being measured, then the sealed receiver chamber contains a gaseous atmosphere with a defined CO content. This gas absorbs a portion of the CO-specific radiation. This absorption process is accompanied by an increase in the temperature of the gas, which then generates a gas current flowing from volume V_1 and through a flow sensor on its way to compensating volume V_2. A rotating "chopper disc" (4) induces a rhythmic interruption in the beam to produce an alternating flow between volumes V_1 and V_2. The flow sensor converts this motion into an alternating electrical signal. When a test gas with a variable CO content flows through the measuring cell it absorbs radiant energy in quantities proportional to its CO content; this energy is then no longer available in the receiver chamber.

Infrared test chamber (schematic)

1 Receiver chamber with compensation volumes V_1 and V_2, **2** Flow sensor, **3** Test cell, **4** Rotating "chopper disc" with motor, **5** Infrared projector.

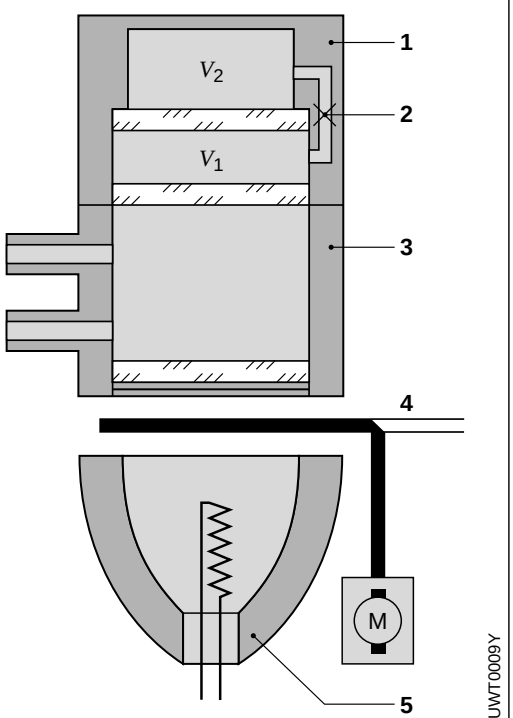

Fig. 5

As this leads to a reduction in the base flow to the receiver chamber, the deviation from the alternating base signal serves as an index of the CO content in the test gas.

Gas path (Fig. 6, next page)

A probe (1) is employed to extract the test gas from the vehicle's exhaust system. The tester's integral diaphragm pump (6) extracts the gas, drawing it through the loose-mesh filter screen (2) and into the water trap (3) to remove condensation and larger particulates prior to subsequent cleansing in the fine-mesh filter

(4). The solenoid valve (5) located upstream from the diaphragm pump switches the entry to the test chamber (9) from exhaust gas to air and the system automatically recalibrates to zero. Back-up filters in the supply orifices for both exhaust gas and air ensure that particulates do not enter the test chamber, which is also sealed against condensation of the kind that could enter the system if the external water trap were allowed to overflow. The restriction in the tank (10) pressurizes the safety reservoir (8) to induce a flow through the bypass circuit and to the test chamber. Gravity pulls any moisture ingested into the system back into the tank, whence it escapes back into the atmosphere. The pressure switch (7) monitors gas flow to ensure that adequate amounts of gas are drawn into the system. The restrictor in the safety reservoir raises pressure levels at the pump discharge to activate the pressure switch, which will consequently be released if the gas flow is interrupted, simultaneously triggering a warning display to alert the operator.

Testing the catalytic converter

On vehicles with closed-loop mixture control a representative component can be used for indirect assessment of the catalytic converter's operation. The best proxy is CO, which should not exceed 0.2% by volume in the gas emerging from the catalytic converter when lambda is maintained at a precise level of 1.00 (+0.01).

Lambda, in turn, is determined based on the composition of the exhaust gases emerging from the catalytic converter. The exhaust-gas analyzer determines lambda with the required accuracy using measurements based on the CO, HC, CO_2 and O_2 in the exhaust gas along with defined constants for NO and fuel composition.

O_2 concentrations are monitored with an electrochemical probe.

Fig. 6

Gas flow path in CO tester

1 Probe, **2** Filter screen, **3** Water separator, **4** Fine-mesh filter, **5** Solenoid valve, **6** Diaphragm pump, **7** Pressure switch, **8** Safety reservoir, **9** Test chamber, **10** Tank.

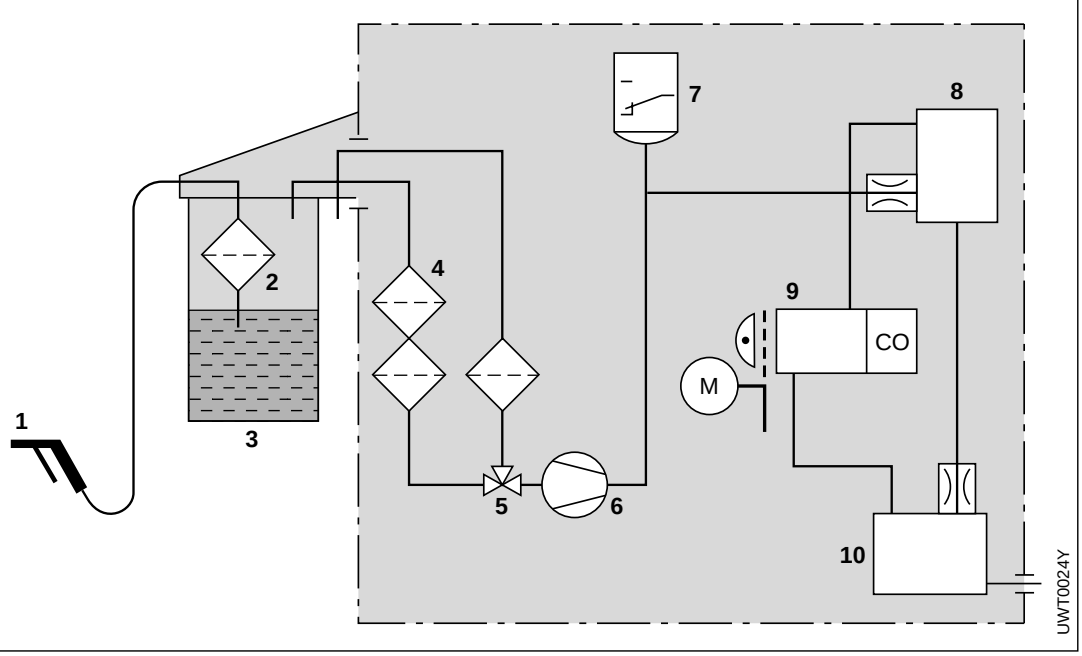

Current (1998) emissions limits for gasoline engines

Table 1
EU emissions limits as measured in ECE/EU test cycle

Standards	Introduction	CO g/km	HC g/km	NO_X g/km	$HC+NO_X$ g/km
EU Stage I	07.92	2.72	–	–	0.97
EU Stage II	01.96	2.2	–	–	0.5
EU Stage III	01.00	2.3	0.2	0.15	–
EU Stage IV	01.05	1.0	0.1	0.08	–

Table 2
US Federal (49 state) and California emissions limits. FTP 75 test cycle

	Model year	Standards	CO g/mile	HC g/mile	NO_X g/mile
US Federal	1994	Level 1	3.4	0.25	0.4
	2004 [1])	Level 2	1.7	0.125 [2])	0.2
California	[3])	TLEV [4])	3.4	0.125 [2])	0.4
	[3])	LEV [5])	3.4	0.075 [2])	0.2
	[3])	ULEV [6])	1.7	0.04 [2])	0.2

[1]) Proposal. [2]) NMOG = Non Methanic Organic Gases. [3]) Introduction varies according to manufacturer's NMOG fleet average (both vehicle and total fleet are certified).
[4]) Transitional Low Emission Vehicles. [5]) Low Emission Vehicles. [6]) Ultra Low Emission Vehicles.

Table 3
US emissions limits. STFP test cycle

	NMHC[1])+NO_X g/mile	$CO_{Composite}$ [2]) g/mile	CO_{SC03} [2]) g/mile	CO_{US06} [2]) g/mile
up to 50,000 miles	0.65	3.4	3.0	9.0
50,000 to 100,000 miles	0.91	4.2	3.7	11.1

[1]) Non Methane HC. [2]) The manufacturer has the option of selecting $CO_{Composite}$ or CO_{SC03} and CO_{US06} limits.

Table 4
Emissions limits for Argentina, Australia, Brazil, Canada, Mexico, Norway, Switzerland, and South Korea measured with FTP 75 test cycle

Country	Introduction	CO g/km	HC g/km	NO_X g/km	Evap. emissions (HC) g/test
Argentina	01.97	2.0	0.3	0.6	6.0
Australia	01.97	1.9	0.24	0.57	1.9
Brazil	01.97	2.0	0.3	0.6	6.0
Canada	01.98	2.1	THC [2]) 0,25; NMHC [3]) 0,16	0.24	2.0
Mexico	01.95	2.1	0.25	0.62	2.0
Norway	01.89	2.1	0.25	0.62	2.0
Switzerland [1])	10.87	2.1	0.25	0.62	2.0
South Korea	01.91 01.00	2.1	0.25 0.16	0.62 0.25	2.0

[1]) EU/ECE regulations recognized since 10/95. [2]) THC =Total HC. [3]) NMHC = Non Methane HC.

Table 5
Japanese emissions limits measured in Japanese test cycle

Test procedure	CO	HC	NO_X	Evap. emissions
10·15-mode (g/km)	2.1…2.7 (0,67)	0.25…0.39 (0,08)	0.25…0.48 (0,08)	–
11-mode (g/test)	60.0…85.0 (19,0)	7.0…9.5 (2,2)	4.4…6.0 (1,4)	–
SHED (g/Test)	–	–	–	2.0

( ) planned figures

The Program

	Order Number
Gasoline-engine management	
Emission Control (for Gasoline Engines)	1 987 722 102
Gasoline Fuel-Injection System K-Jetronic	1 987 722 159
Gasoline Fuel-Injection System KE-Jetronic	1 987 722 101
Gasoline Fuel-Injection System L-Jetronic	1 987 722 160
Gasoline Fuel-Injection System Mono-Jetronic	1 987 722 105
Ignition	1 987 722 154
Spark Plugs	1 987 722 155
M-Motronic Engine Management	1 987 722 161
ME-Motronic Engine Management	1 987 722 178
Diesel-engine management	
Diesel Fuel-Injection: An Overview	1 987 722 104
Diesel Accumulator Fuel-Injection System Common Rail CR	1 987 722 175
Diesel Fuel-Injection Systems Unit Injector System / Unit Pump System	1 987 722 179
Radial-Piston Distributor Fuel-Injection Pumps Type VR	1 987 722 174
Diesel Distributor Fuel-Injection Pumps VE	1 987 722 164
Diesel In-Line Fuel-Injection Pumps PE	1 987 722 162
Governors for Diesel In-Line Fuel-Injection Pumps	1 987 722 163
Automotive electrics/Automotive electronics	
Alternators	1 987 722 156
Batteries	1 987 722 153
Starting Systems	1 987 722 170
Electrical Symbols and Circuit Diagrams	1 987 722 169
Lighting Technology	1 987 722 176
Safety, Comfort and Convenience Systems	1 987 722 150
Driving and road-safety systems	
Compressed-Air Systems for Commercial Vehicles (1): Systems and Schematic Diagrams	1 987 722 165
Compressed-Air Systems for Commercial Vehicles (2): Equipment	1 987 722 166
Brake Systems for Passenger Cars	1 987 722 103
ESP Electronic Stability Program	1 987 722 177